OFFICE OF THE MAYOR
CITY AND COUNTY OF HONOLULU

530 SOUTH KING STREET, ROOM 300 * HONOLULU, HAWAI'I 96813
PHONE: (808) 768-4141 * FAX: (808) 768-4242 * INTERNET: www.honolulu.gov

PETER B. CARLISLE
MAYOR

DOUGLAS S. CHIN
MANAGING DIRECTOR

CHRYSTN K. A. EADS
DEPUTY MANAGING DIRECTOR

March 23, 2012

RECEIVED
CITY CLERK
C & C OF HONOLULU
2012 MAR 23 PM 2: 35

The Honorable Ernest Y. Martin, Chair
and Members
Honolulu City Council
530 South King Street, Room 202
Honolulu, Hawaii 96813

Subject: Transmittal of AECOM Technical Memorandum in Response to Resolution 11-182: *Sand Island WWTP Evaluation of Sludge Processing Alternatives*

Dear Chair Martin and Councilmembers:

We are transmitting copies of the AECOM report we received this morning comparing and contrasting dewatering and anaerobic digestion alternatives at the Sand Island Wastewater Treatment Plant. This report is a further study in response to Resolution 11-182. Please find enclosed:

(1) AECOM Report: *Sand Island WWTP Evaluation of Sludge Processing Alternatives*, March 2012, nine (9) hard-copies, each containing one (1) CD disk with PDF files of the report

(2) CD disk with PDF files of the report, two additional (2) copies

Should you have any questions or concerns please contact Deputy Director Ross Tanimoto, Department of Environmental Services, at 768-3482.

Very truly yours,

Peter B. Carlisle

Peter B. Carlisle
Mayor

Enclosures

cc: Director Tim Steinberger, ENV
Managing Director Doug Chin
Ms. Rae Loui, AECOM

Technical Memorandum

Sand Island WWTP
Evaluation of Sludge Processing Alternatives

Oahu, Hawaii

Final

March 2012

Prepared for:
City & County of Honolulu
Department of Environmental Services
1000 Uluohia Street Suite 308
Kapolei, Hawaii 96707

Prepared by:
AECOM
1001 Bishop Street, Suite 1600
Honolulu, Hawaii 96813

ENCL. TO MM 31

TABLE OF CONTENTS

1.0 INTRODUCTION AND OVERVIEW 1

1.1 Purpose and Scope of Work 1
1.2 Background and Description of Existing Facility 2
1.3 Permit Requirements and Regulatory Considerations 5
1.4 Flows and Loadings 6

2.0 ISSUES ASSOCIATED WITH MODIFICATIONS 11

2.1 Sludge Screening 11
2.2 Sludge Blending 11
2.3 Sludge Stabilization or Treatment 11
2.4 Space Limitations 12
2.5 Odor Control 13
2.6 Use of Digester Biogas and Supplemental Fuel 13

3.0 DESCRIPTION OF OPTIONS 14

3.1 Baseline: Build New Digester and Continue to Operate Existing Dryer 14
3.2 Option 1: Dewater Excess Raw Undigested Primary Sludge and Transfer the Cake Material to H-Power 17
3.3 Option 2: Dewater Blend of Digested and Undigested Primary Sludge and Transfer the Cake Material to H-Power 20
3.4 Option 3: Dewater Undigested Primary Sludge with Chemical Sludge Stabilization and Transfer the Cake material to H-Power for Incineration 23
3.5 Option 4: Dry Blended Digested and Undigested Sludge Using Existing Dryer 25
3.6 Option 5: Dry Blended Digested and Undigested Sludge Using New Dryer 28
3.7 Option 6: Dry All Undigested Sludge Using New Dryer 31
3.8 Option 7: Build a Second Digester and Replace Dryer With One That Operate Utilizing CHP Waste Heat 34

4.0 ALTERNATIVE DRYERS 38

5.0 LIFE CYCLE COST COMPARISON AND DISCUSSION 40

5.1 Comparison to Current Operating Costs 43

6.0 NON-MONETARY CONSIDERATIONS 45

6.1 Past 2035 Sizing and Land Issues 45
6.2 Unknown and Unaccounted for Costs 45
6.3 Operations, Maintenance and Manpower Impacts 45
6.3.1 Operational Complexity 45
6.3.2 Handling and Hauling Considerations 46
6.3.3 Reliability and Redundancy of Operation 46
6.3.4 Potential Failure Modes and Consequences 47
6.4 Comparison to Typical Industry Practice 47
6.5 Potential Regulatory Issues 48
6.6 Outlet or Market Long-Term Viability 48
6.6.1 H-Power Operating Requirements 48
6.6.2 Market Suitability of Dried Fertilizer Material 49

6.6.3 Cake Product Outlets 49
6.6.4 Rising Cost of Energy and Waste to Energy Opportunities 49
6.7 Implementation Schedule 52

7.0 CONCLUSIONS AND RECOMMENDATION 53

7.1 Thermal Processing Other Than H-Power 53
7.2 Impacts of Existing Contractual Agreements 53
7.3 Recommendation 54

TABLES

Table 1-1. Sludge Loadings 7
Table 1-2. Summary of Sand Island Digester Data for Fiscal Year 2010-2011 8
Table 1-3. Summary of Synagro's Consumables for Fiscal Year 2010-2011 8
Table 1-4. Summary of Sand Island Hauling Data for Fiscal Year 2010-2011 9
Table 1-5. Comparison of the Sand Island Sludge Production and Hauling Data for Fiscal Year 2010-2011 10
Table 3-1. Baseline Case Advantages and Disadvantages 15
Table 3-2. Option 1 Advantages and Disadvantages 18
Table 3-3. Option 2 Advantages and Disadvantages 21
Table 3-4. Option 3 Advantages and Disadvantages 23
Table 3-5. Option 4 Advantages and Disadvantages 26
Table 3-6. Option 5 Advantages and Disadvantages 29
Table 3-7. Option 6 Advantages and Disadvantages 32
Table 3-8. Option 7 Advantages and Disadvantages 34
Table 3-9. 2015 Mass and Energy Balance Summary 36
Table 3-10. 2035 Mass and Energy Balance Summary 37
Table 5-1. 20-Year LCC Break Down 41
Table 6-1. Non-Economic Factors 51

FIGURES

Figure 1-1. Current SIWWTP Process Flow Diagram 4
Figure 3-1. Process Flow Schematic – Baseline Condition 16
Figure 3-2. Process Flow Schematic – Option 1 19
Figure 3-3. Process Flow Schematic – Option 2 22
Figure 3-4. Process Flow Schematic – Option 3 24
Figure 3-5. Process Flow Schematic – Option 4 27
Figure 3-6. Process Flow Schematic – Option 5 30
Figure 3-7. Process Flow Schematic – Option 6 33
Figure 3-8. Process Flow Schematic – Option 7 35
Figure 5-1. 20-Year LCC Summary 40
Figure 5-2. 20-Year LCC Break Down 42
Figure 5-3. Total Sludge Production Estimate and Current Conditions at H-Power 43

APPENDICES

Appendix A – Background Assumptions
Appendix B – Construction and Life-Cycle Cost Calculations
Appendix C– Vendor Quotes and Equipment Information
Appendix D– Installation List

Note: Appendices C and D included in a compact disk.

WORKS CITED

Metcalf & Eddy. (2003). *Wastewater Engineering Treatment and Reuse, 4th Edition*.

R.M. Towill Corporation. (2011) *Sand Island Wastewater Treatment Plant & Sewer Basin Facilities, Preliminary Engineering Report.*

US EPA. (1994). *A Plain English Guide to the EPA Part 503 Biosolids Rule, EPA/832/R-93/003. Chapter 4 – Incineration of Biosolids*

ACRONYMS/ABBREVIATIONS

BAF	Biological aerated filter
Btu	British thermal unit
CCH	City and County of Honolulu
CFU	Colony forming units
CHP	Combined heat and power
EA	Environmental Assessment
ENV	Department of Environmental Services
EPA	United States Environmental Protection Agency
F	Fahrenheit
IPS	Influent Pump Station
LCCA	Life-cycle cost analysis
mgd	million gallons per day
MPN	Most probable number
MSW	Municipal solid waste
NPDES	National Pollutant Discharge Elimination System
NPV	Net present value
PSRP	Process to significantly reduce pathogens
PFRP	Process to further reduce pathogens
Sand Island Fac Plan	Sand Island Wastewater Facilities Plan
SIWWTP	Sand Island Wastewater Treatment Plant
SMA	Special Management Area
UV	Ultraviolet
WWPS	Wastewater Pump Station
WWTP	Wastewater Treatment Plant
ZOM	Zone of Mixing

EXECUTIVE SUMMARY

The City and County of Honolulu (CCH) Department of Environmental Services (ENV) is in the process of developing the Sand Island Wastewater Facilities Plan (Sand Island Fac Plan) which covers the Sand Island sewer basin. The study area for the Sand Island Fac Plan consists of the Sand Island Wastewater Treatment Plant (SIWWTP) and its wastewater service area serving the eastern half of Oahu. The SIWWTP sewer basin serves a population of over 700,000 and provides preliminary and primary treatment to all flows at present. Currently, SIWWTP treats approximately 60 million gallons per day (mgd) of wastewater from the sewer basin.

AECOM has prepared this preliminary engineering study report for various alternatives to retrofit the existing Sand Island Biosolids Processing System (operated by Synagro). CCH requested a review to evaluate whether alternative options that incorporate incinerating residuals at H-Power are viable and cost effective compared to the construction of a second digester in accordance with the provisions of the existing Synagro contract. An additional driver and goal for CCH is to eliminate landfilling waste materials other than ash in the near future.

EVALUATED OPTIONS

A summary of the options evaluated in this report along with capital and 20 year present worth life cycle Costs (LCC) cost are listed in **Table ES-1** and defined as follows:

- Baseline - Build new digester and continue to operate existing dryer. A sub option incorporating combined heat and power (CHP) was also evaluated.
- Option 1 - Dewater the excess raw undigested primary sludge and transfer the cake material to H-Power for incineration.
- Option 2 - Dewater blended digested and undigested primary sludge and transfer the cake material to H-Power for incineration. A sub option incorporating CHP was also evaluated.
- Option 3 - Dewater and chemically treat undigested sludge and transfer cake to H-Power for incineration
- Option 4 - Dry blended digested and undigested primary sludge using the existing dryer and transfer the dry material to H-Power for incineration.
- Option 5 - Dry blended digested and undigested primary sludge replacing the existing dryer and transfer the dry material to H-Power for incineration. A sub option incorporating CHP was also evaluated.
- Option 6 - Dry undigested sludge using a new dryer and transport the dry material to H-Power for incineration.
- Option 7 - Build a second digester and replace existing dryer with one that operates utilizing waste heat from cogeneration

The above options consider inclusion of CHP where appropriate. CHP is currently intended for future implementation at WWTPs as part of island-wide planning.

A summary and comparison of some of the non-economic factors for each Option is shown in **Table ES-2**. There are non-quantifiable aspects that need to be considered in the decision but

since they are policy-related, CCH should carefully consider the attached table in order to incorporate aspects such as reliability and risk in addition to cost and timing in its decision-making process.

It should be noted that Options evaluated and life cycle costs presented in this report do not account for:

- Increase in solids production due to planned secondary treatment beyond 2035
- Potential revenue from H-Power from energy produced by the sludge used as fuel, as the specific details of this are to be determined based on agreement with the H-Power operator.
- Options for incineration at SIWWTP

Preliminary implementation milestones for the Baseline following a notice to proceed (NTP) are:

- Complete Design: 6 Months from NTP
- Obtain EA/SMA/Permits: 8 Months from NTP
- Procurement and Award: 4 Months from Permit Approval
- Construction Complete: 30 Months from Award
- Total Estimated Duration: 42 Months (3.5 Years)

The engineering, permitting, procurement and equipment supply for all Options would have a similar duration to the Baseline. The construction of the digester is somewhat of a specialty and may take slightly longer than installation of equipment such as an alternate dryer or centrifuge. However, the above timeline should be used for planning purposes regarding any of the evaluated options.

It should be noted that the time needed for the front end of the procurement process, prior to the NTP, may vary considerably depending on whether an existing contract is amended or a new procurement process is started. The difference in the two processes varies but can potentially be significant, perhaps up to a full year difference in the time required.

CONCLUSION

The 20 year life cycle cost estimates for the Baseline Options and Options 1, 2b, 4, 5, 5b and 7 are all within approximately 10% of one another. With the accuracy of cost estimation available for this level of planning purposes it is possible that the actual ranking may vary with detailed planning, design, construction and implementation. There are specific limitations that were identified for some of these options:

- Options 2b - The H-Power operator has indicated to CCH that undigested sludge product (Options 2b) would not be an acceptable product other than on a short term emergency basis.
- Option 4 – The existing dryer manufacturer highly discourages the drying of blended sludge (Option 4) and may not warranty operation of their equipment in such a manner.
- Option 5 – The 20 year life cycle cost is similar to that for implementing the Baseline Option with CHP. However, the lack of a second digester reduces the overall process reliability when compared to the Baseline Options and would require disposal of large amounts of undigested cake during maintenance or repair of the existing digester.

Additionally, the lower quality blend of digested and undigested sludge may limit marketability as a fertilizer product.

- Option 7 – The overall cost and process reliability is similar to that of the Baseline Option. However, the dry product will not have the same uniformity characteristics as the existing pellets and may reduce marketability as a fertilizer product.

Based on the above, the Baseline Option and Option 7 have the highest level of process reliability, while meeting the requirements of the dryer manufacturer (Andritz) and acceptability by the H-Power operator (Covanta). Options 1 or 2 may be accepted by H-Power on emergency or short term interim basis dependent on quality and quantity of material.

Table ES-1: Options Summary

Option	Digestion	Dewatering	Chemical Treatment	Drying	Biogas Use	Offsite Incineration	Fertilizer Product	Capital Costs[1]	20 Year LCC[2]
Baseline	Additional digester	All as digested	None	Existing direct dryer for all (digested)	Digester heating and drying, excess flared	None	Continue existing pellets w/ digested	$25.7 MM	$94.1 MM
Baseline (With CHP)[3]	Additional digester	All as digested	None	Existing direct dryer for all (digested)	Digester heating and drying, excess to CHP cogen	None	Continue existing pellets w/ digested	$34.2 MM	$93.8 MM
Option 1	Existing digester only	Digested and undigested separately	Undigested cake portion	Existing direct dryer for only digested portion	Digester heating and drying, excess flared	Dewatered cake undigested	Continue existing pellets w/ digested	$8.7 MM	$99.6 MM
Option 2	Existing digester only	Digested and undigested separately	Undigested cake portion	None	Digester heating, excess flared	Dewatered cake blended	None	$8.7 MM	$111.9 MM
Option 2 b (With CHP)	Existing digester only	Digested and undigested separately	Undigested cake portion	None	Digester heating and CHP cogen	Dewatered cake blended	None	$22.1 MM	$99.0 MM
Option 3	No digestion	All as undigested	All as undigested cake	None	None	Dewatered cake undigested	None	$11.2 MM	$184.7 MM
Option 4	Existing digester only	Digested and undigested separately	Potential backup	Existing direct dryer for all (blended)	Digester heating and drying, excess flared	Dried pellets blended	Lower quality pellets w/ blended	$9.0 MM	$95.4 MM
Option 5	Existing digester only	Digested and undigested separately	Potential backup	New indirect dryer for all (blended)	Digester heating and drying, excess flared	Dried granular blended	Lower quality granular solids w/ blended sludge	$17.0 MM	$85.7 MM
Option 5b (With CHP)	Existing digester only	Digested and undigested separately	Potential backup	New indirect dryer for all (blended)	CHP cogen w/ waste heat for digester heating and drying	Dried granular blended	Lower quality granular solids w/ blended sludge	$30.4 MM	$102.2 MM
Option 6	No digestion	All as undigested	Potential backup	New indirect dryer for all (undigested)	None	Dried granular undigested	Lower quality granular solids w/ undigested primary sludge	$22.4 MM	$144.7 MM
Option 7 (Incl. CHP)	Additional digester	All as digested	None	New indirect dryer for all (digested)	CHP cogen w/ waste heat for digester heating and drying	None	Less uniform product than direct dryer w/ digested	$53.0 MM	$97.3 MM

1. The carrying costs associated with construction of the original digester and bioconversion facility are not included as part of the Capital Costs or LCC. Issues such as remaining bond repayment and remaining contractual arrangements are not included or accounted for as part of these costs and may alter final rankings if and when considered. Capital costs are based on February, 2011 costs $ENR_{20\ Cities}$ Index = 9,000.
2. Operating costs of the solids processing facilities are based on existing operations as well as typical operating costs associated with the representative processing technologies and may vary based on contractual conditions with third party operators. Section 5.1 provides additional information regarding third party operating costs.
3. CHP: Combined Heat and Power cogeneration using digester biogas

Table ES-2: Non-Economic Factors

Option	Process Risk	Back-up Processes	Operational Complexity	Comparison to Typical Industry Practice	Dryer Manufacturer Acceptability	H-Power [1] Acceptability
Baseline	Low - well proven	Second Digester and Chemical Treatment	Medium	Commonly used	Accepted by existing dryer manufacturer	Acceptable as dry pellets or digested cake
Baseline (with CHP)	Low - well proven	Second Digester and Chemical Treatment	Medium	Commonly used	Accepted by existing dryer manufacturer	Acceptable as dry pellets or digested cake
Option 1	Low - well proven	Chemical Treatment	Medium to High	Both processes commonly used	Accepted by existing dryer manufacturer	Not acceptable as undigested cake
Option 2	Low - well proven	Chemical Treatment	Low to Medium	Both processes commonly used	No Drying	Not acceptable as undigested cake
Option 2b (with CHP)	Low - well proven	Chemical Treatment	Medium	Both processes commonly used	No Drying	Not acceptable as undigested cake
Option 3	Low - well proven	Chemical Treatment	Low	Commonly used	No Drying	Not acceptable as undigested cake
Option 4	High - against vendor recommendation	Chemical Treatment	Medium	Uncommon	Discouraged by existing dryer manufacturer	Acceptable as dry pellets or digested cake
Option 5	Medium - limited successful applications	Chemical Treatment	Medium	Uncommon	Accepted by multiple manufacturers	Acceptable as dry pellets or digested cake
Option 5b (with CHP)	Medium - limited successful applications	Chemical Treatment	Medium	Uncommon	Accepted by multiple manufacturers	Acceptable as dry pellets or digested cake
Option 6	High - No reference sites	Chemical Treatment and Dryer	Medium	Uncommon	Discouraged by several manufacturers	Acceptable as dry pellets or digested cake
Option 7 (with CHP)	Low - well proven	Second Digester and Chemical Treatment	Medium	Commonly used	Accepted by multiple manufacturers	Acceptable as dry pellets or digested cake

[1] H-Power would consider the acceptance of undigested cake on an emergency short term basis only.

RECOMMENDATION

There are several key issues that are driving the future for sludge processing and disposal locally:

- The changing demographics of the island land use away from agricultural activities toward residential and tourism could eventually limit the future market of land application for soil amendment and fertilizer purposes. The currently available and planned facilities that CCH intends to use for creation of fertilizer and compost product should be adequate to meet future market demands. The current pelletized fertilizer product produced by Synagro is currently supplied to users at no charge and the market demand for such product does not appear to have a strong future growth opportunity. The demographic of residential and tourism typically prefer other soil amendment products that do not use wastewater biosolids and often require significant engagement to prove that it has equivalent aspects to other market products.
- There is a relatively high cost of both fossil fuels and electrical power locally and a national trend for energy costs to continue to grow at a greater pace than inflation. Due to the rising cost of power and recent technology developments, the implementation of waste to energy and energy reduction improvements at wastewater and solids handling facilities is growing rapidly. These technologies typically consist of combined heat and power cogeneration using combustible biogas gas from anaerobic digesters as well as thermal oxidation of solids, which also greatly reduces the amount of waste material for disposal.
- Due to the limitation of available land there is a strong desire locally to limit or eliminate the amount of material that is required for disposal at a landfill. A goal for CCH is the elimination of landfilling of materials other than ash in the near future. The ongoing operation and expansion of the H-Power waste to energy facility plays a key role in this by greatly reducing the amount of material that is land filled while generating electricity from the municipal solid waste it receives.
- There are existing and established sludge processing assets in place at the three largest WWTPs. Many of these assets are relatively new and provide a consistent and reliable treatment process. Consideration of the potential operational benefits and capital investment already in place will be part of any future planning considerations.

Based on these key issues and available opportunity it is recommended that CCH pursue a long term strategy for the processing and disposal of sludge that focuses on cost effective recovery of energy and minimization of sludge solids through generation of an ash product by thermal oxidation. Additionally, CCH should retain the ability to have multiple processing and outlet sources available in the future to ensure continued and reliable service in the event of the unforeseen. Any changes to in plant processing or end use/disposal should be focused on establishing an overall level of risk and reliability that is equal to or better than current operations.

Available industry established technologies and strategies that either recover energy and/or reduce waste include:

- Anaerobic digestion reduces the volatile solids portion of sludge and creates a combustible biogas. The biogas can be used to generate both heat energy for use in treatment processes and electrical energy that can be using in the plant or returned to

the power grid. The digested end product is reduced in mass but would require subsequent thermal oxidation to convert to an ash product.

- Digested, undigested or blended sludge can be dewatered to create a cake product with approximately +/-30 percent solids concentration and thermally oxidized either onsite or off site. This material would burn autogenously (energy to remove water equals energy recovery from solids) generating no additional energy other than what is required to reduce the material to ash. It should be noted that digestion reduces the thermal energy available and would require a dryer cake product to burn autogenously, however, it reduces the incinerator mass throughput so the equipment sizing can be reduced.
- Digested, undigested or blended sludge can be dewatered and then dried to create a solid product with approximately +90 percent solids concentration and thermally oxidized either onsite or off site. This incinerated material has a high thermal value and may be capable of generating both heat and electrical energy while reducing the material to ash. As with incineration of cake material, digestion reduces the thermal energy available. Additionally there is heat energy required for drying of the material from the +/-30 percent solids to the +90 percent solids that would need to be taken into consideration of net energy benefit.

This strategy of waste minimization and energy recovery is aligned with that for municipal solids waste and there may be opportunities for pursuit of solutions that are mutually beneficial to both. The H-power facility is one potential outlet opportunity and should be fully pursued and developed along with other available outlets. H-Power is an operating and permitted facility that is currently planned to have the capability to receive 90 tons per day of +/-30 percent solids sludge cake material. It is unknown if or how much +90 percent dry sludge material H-Power could receive but this would represent a significant opportunity for energy recovery and waste reduction. It is recommended that is issue be fully investigated prior to making any long term decisions regarding sludge handling operations at any of the WWTPs.

CCH is currently engaged in an Island-wide Biosolids Master Plan, which will outline future needs and solutions for all nine CCH WWTPs in an integrated manner. Maintaining a diverse sludge management portfolio that allows for multiple disposal options such as land application, thermal processing (such as H-Power), or landfill disposition will provide the greatest flexibility to deal with market fluctuations and equipment outages.

With regards the current sludge processing facilities at SIWWTP the determination of modifications to the existing operation should be based on the final determination of the type and amount of material that can be received at H-Power. Additional considerations include the determination of cost effectiveness related to digestion and beneficial use of biogas to either generate electricity and/or provide thermal energy for drying and process operations. When comparing capital costs, consideration should be given to providing adequate redundant process equipment and/or back-up processes. If a second digester is not installed then a sufficient number of centrifuges and chemical treatment system should be installed sufficient to dewater and handle the undigested sludge flow. Additionally it should be ensured that a disposal outlet is capable of receiving undigested, chemically treated sludge in the quantity anticipated if the existing digester is out of service.

Based on the key aspects discussed, the life cycle cost comparison and keeping potential risk at or below current conditions it is recommended that a second digester be pursued that can maintain process reliability with a range of outlet opportunities. Furthermore the options available for incineration of cake and/or dried sludge at H-Power should be further evaluated and developed to provide opportunities for SIWWTP as well as the other eight CCH WWTPs.

Final determination of a long term outlet for the digested sludge from SIWWTP should be part of the Island-wide Biosolids Master Plan, which will consider the opportunities as H-Power and other potential outlets.

1.0 INTRODUCTION AND OVERVIEW

The City and County of Honolulu (CCH) Department of Environmental Services (ENV) is in the process of developing the Sand Island Wastewater Facilities Plan (Sand Island Fac Plan) which covers the Sand Island sewer basin. The study area for the Sand Island Fac Plan consists of the Sand Island Wastewater Treatment Plant (WWTP) and its wastewater service area serving the eastern half of Oahu.

The SIWWTP sewer basin serves a population of over 700,000 and includes 16 CCH operated wastewater pump stations (WWPSs). The SIWWTP provides preliminary and primary treatment to all flow at present. Currently, the SIWWTP treats approximately 60 million gallons per day (mgd) of wastewater from the sewer basin.

1.1 Purpose and Scope of Work

Based on discussions with the CCH staff, AECOM has prepared this preliminary engineering study report for various alternatives to retrofit the existing Sand Island Biosolids Processing System (operated by Synagro). CCH requested a review to determine if one or more of the following options are viable and cost effective compared to the construction of a second digester in accordance with the provisions of the existing Synagro contract. An additional driver and goal for CCH is to eliminate landfilling waste materials other than ash in the near future.

The following options are considered in this study and the inclusion of combined heat and power cogeneration (CHP) was also considered where appropriate. CHP is currently intended for future implementation at WWTPs as part of island-wide planning.

- Baseline - Build new digester and continue to operate existing dryer. A sub option with CHP was also considered.
- Option 1 - Dewater the excess raw undigested primary sludge and transfer the cake material to H-Power for incineration.
- Option 2 - Dewater blended digested and undigested primary sludge and transfer the cake material to H-Power for incineration. A sub option with CHP was also considered
- Option 3 - Dewater and chemically treat undigested sludge and transfer cake to H-Power for incineration
- Option 4 - Dry blended digested and undigested primary sludge using the existing dryer and transfer the dry material to H-Power for incineration.
- Option 5 - Dry blended digested and undigested primary sludge replacing the existing dryer and transfer the dry material to H-Power for incineration. A sub option incorporating CHP and utilizing waste heat from the CHP for drying was also considered.
- Option 6 - Dry undigested sludge using a new dryer and transport the dry material to H-Power for incineration.
- Option 7 - Build a second digester and replace existing dryer with one that operates utilizing waste heat from cogeneration.

The options presented above outline potential solutions that are specifically for the SIWWTP. However, the selected option for processing Sand Island's residuals will impact the Island-wide Biosolids Master Plan that is currently under development. The various options presented produce different quality and quantity of product that will impact regionalized or centralized solutions under consideration.

The study will address the following issues in the review and development of the options:

- Construction and 20 year life-cycle costs for the various options
- Cost estimates of the various options compared to the cost estimate to construct a second egg shape digester
- Cake transfer to trucks, and related issues
- Odor emissions associated with dewatering and trucking undigested sludge cake
- Mass and energy balances for each option
- Impact on biogas production and use at the Sand Island Bioconversion (Synagro) Facility for the various options
- Feasibility of implementing CHP using excess biogas
- Feasibility of using waste heat from the CHP system for the drying process
- Marketability or usability of granular material from drying blended raw and digested sludge
- Feasibility of new (and different type) dryers to allow processing of raw primary sludge and/or utilize waste heat from potential future CHP systems at the SIWWTP

This study will not address the following in the review and development of the options:

- Increase in solids production due to planned secondary treatment beyond 2035
- Potential revenue from H-Power from energy produced by the sludge used as fuel, as the specific details of this are to be determined based on agreement with the H-Power operator.
- Options for incineration at SIWWTP

1.2 Background and Description of Existing Facility

The following is a description of the existing SIWWTP liquid handling system:

- Influent receiving structure where the seven force mains discharging to the SIWWTP converge
- Six influent filter screens each 5 feet wide
- Four aerated grit chambers each approximately 22 feet wide, 65 feet long with a 14 foot sidewater depth
- Eight clarifiers each 150 feet diameter (six are flotator clarifiers, and two are conventional primary settling tanks)
- Three primary effluent screens each 10 feet wide
- Six ultraviolet (UV) disinfection channels and five reactors
- One effluent pump station with four vertical turbine pumps
- Ocean outfall

The following is a description of the existing SIWWTP solids handling system:

- Four primary sludge gravity thickeners each 50 foot diameter
- Four thickened wet sludge storage tanks
- One anaerobic digester (egg shape) with an effective volume of 2.35 million gallons
- One digested sludge storage cylinder, and one digester gas holder cylinder
- One strain press on the digested sludge feed to the centrifuges
- Two centrifuges to dewater digested sludge

- One rotary drum dryer
- One dried solids storage silo

A process flow diagram of the Sand Island Facility is provided in **Figure 1-1**.

Figure 1-1. Current SIWWTP Process Flow Diagram

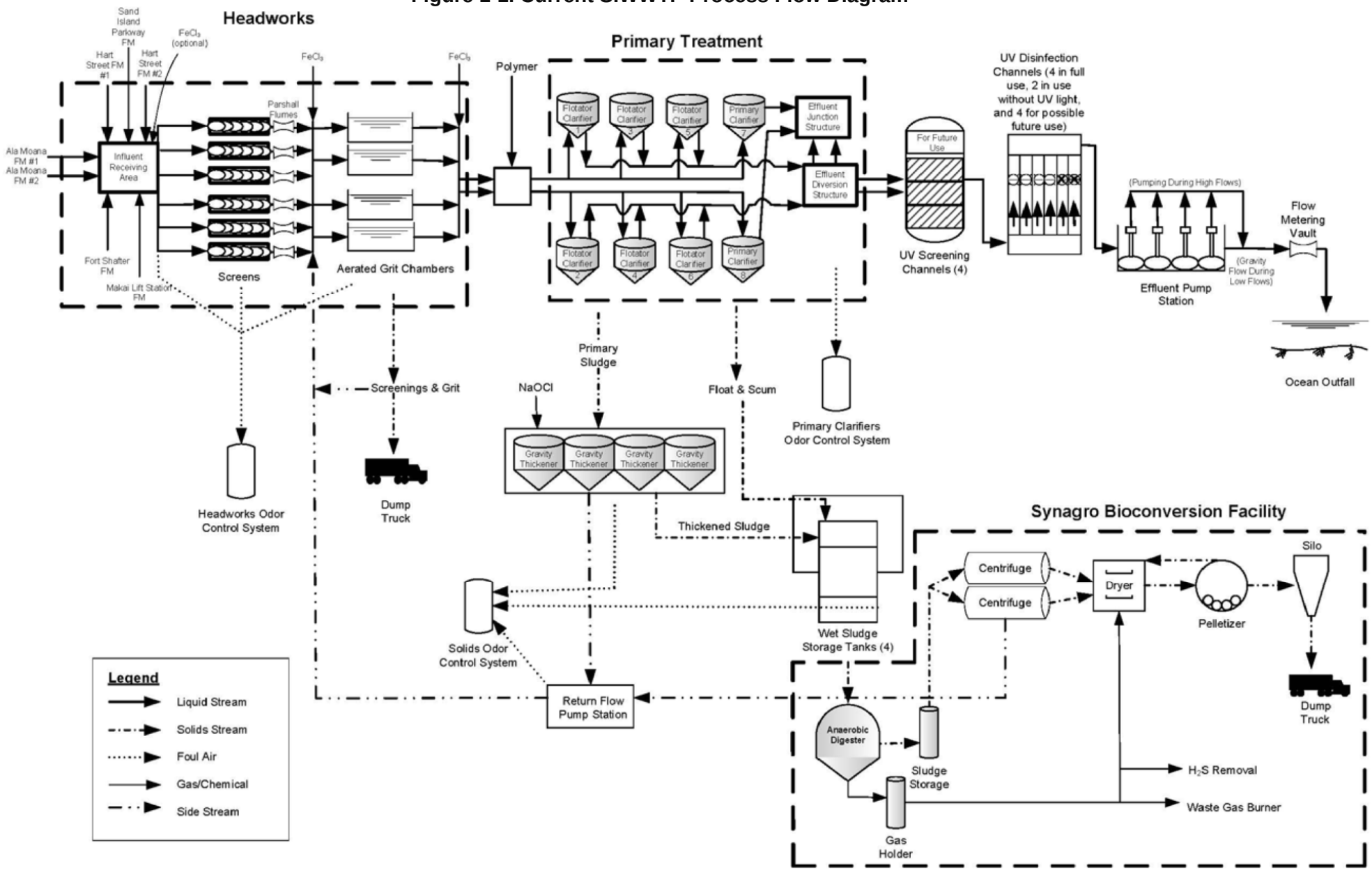

*From R.M. Towill Preliminary Engineering Report (2011)

The SIWWTP currently generates only primary solids which are gravity thickened to six to seven percent solids before being sent to the Synagro operated bioconversion facility. The bioconversion (Synagro) facility consists of an egg shaped digester, centrifuge dewatering and a rotary drum dryer. The pellets produced at the facility are marketed as Granulite®. The pellets have been used as a fertilizer at agricultural farms, golf courses, and parks. Pellets not suitable for market are hauled to the Waimanalo Gulch Landfill for disposal. During the 2010 – 2011 contract year, approximately 85 percent of the pellets were beneficially utilized. However, revenue was not generated from sale of the pellets. The pellets were given away at no cost to the end user in order to establish local interest and demand for the product. Synagro and CCH are currently evaluating the possibility to divert product unsuitable for market to H-Power.

The SIWWTP is currently designed to provide enhanced primary treatment; however, it is mandated by a Consent Decree to be upgraded to provide full secondary treatment by December 31, 2035. The compliance date can be extended but the extension for the completion of the work can be no later than December 31, 2038. The secondary treatment system will significantly increase the solids production at the SIWWTP, however, the secondary treatment is not scheduled to begin operation during the 20-year planning period used in this study.

1.3 Permit Requirements and Regulatory Considerations

The SIWWTP is governed by National Pollutant Discharge Elimination System (NPDES) permit No. HI0020117 as modified by the Consent Decree entered in Civil No. 94-00765. The effluent limits for BOD and TSS are included in the Consent Decree. The NPDES permit incorporates the sludge/biosolids regulatory requirements in Section H paragraphs 1 through 15 (beginning on Page 37 of the document). This section references the requirements of Code of Federal Regulations (CFR) “Title 40 – Protection of Environment – Chapter I, United States Environmental Protection Agency Part 503 – Standards for the Use or Disposal of Sewage Sludge” (EPA 503 Regulations). These regulations contain provisions for safe handling and disposal of sewage sludge (biosolids) by land application, surface disposal (landfill disposal), or incineration.

The land application of biosolids is regulated under 40 CFR 503.10 through 40 CFR 503.18. If land application is chosen there are two levels of treatment that could be used:

- Class B – Use on restricted sites using a process to significantly reduce pathogens (PSRP)
- Class A – Unrestricted use with stabilization using a process to further reduce pathogens (PFRP)

Acceptable Class B PSRP technologies include the following:

- Aerobic Digestion (currently not available at the SIWWTP)
- Air Drying (currently not available at the SIWWTP)
- Anaerobic Digestion (currently practiced at SIWWTP)
- Composting - low temperature 40 degrees C or higher for 5 days (currently not available at the SIWWTP)
- Lime Stabilization (currently not available at the SIWWTP)

Acceptable Class A PFRP technologies include the following:

- Composting - high temperature 55 degrees C or higher for 3 days (currently not available at the SIWWTP)
- Heat Drying (currently practiced at SIWWTP)
- Heat Treatment (currently not available at the SIWWTP)
- Thermophilic Aerobic Digestion (currently not available at the SIWWTP)
- Beta Ray Irradiation (currently not available at the SIWWTP)
- Gamma Ray Irradiation (currently not available at the SIWWTP)
- Pasteurization (currently not available at the SIWWTP)

If land application of Class B biosolids is chosen, the pollutant concentrations listed in Table 1 of 40 CFR 503.13 would apply. If land application or distribution and marketing of Class A biosolids is used the pollutant concentrations listed in Table 3 of 40 CFR 503.13 would apply. Pathogen limits and vector reduction attraction requirements are also outlined in the 40 CFR 503 Regulations. The maximum fecal coliform concentration for Class B biosolids shall not exceed 2,000,000 colony forming units (CFU) or most probable number (MPN) per gram of solids (dry weight basis). The pathogen reduction limits for Class A are monitored by using either fecal coliforms or Salmonella as the indicator organism. To meet Class A requirements, either the maximum fecal coliform concentration for Class A biosolids shall not exceed 1,000 MPN per gram of solids (dry weight basis) or the maximum Salmonella concentration shall not exceed 3 MPN per 4 grams of solids (dry weight basis). The 40 CFR Part 503 Regulations also contain provisions and requirements to use other alternative organisms, such as Enteric Viruses and Helminth Ova, to demonstrate the effectiveness of pathogen reduction for processes that do not specifically meet an approved PFRP.

The surface disposal (landfill disposal) of biosolids and sludge is regulated under 40 CFR 503.20 through 40 CFR 503.28. If surface disposal (landfill disposal) is chosen the pollutant concentrations listed in Table 1 of 40 CFR 503.23 would apply.

The regulations outlined in 40 CFR 503.40 through 40 CFR 503.48 – Incineration would have a large impact on the facilities air permit if the solids are incinerated. The new Sewage Sludge Incinerators Rules, enacted in March 2011, regulated under 40 CFR, Part 60 and Section 129 of the Clean Air Act would also apply. From the new rules, all sewage sludge incinerators will now require a Title V air permit. The ruling requires stricter air permitting and monitoring requirements than was previously required under the previous rules which were regulated under Section 112 of the Clean Air Act. The new regulations are specific for Multiple Hearth and Fluid Bed Incineration located at WWTP and do not apply to incineration or waste to energy facilities that are not located at a WWTP (such as H-Power). Incineration technologies are not discussed in this current report but may be considered as a part of the overall island wide sludge strategy.

The facilities air permit would also be impacted in the sub-options that include adding CHP to the facility. The impact would require a site specific evaluation of specific CHP technologies. The details of the air permitting regulations are beyond the scope of this report.

1.4 Flows and Loadings

The average current and future loading to the Sand Island Waste Water Treatment Plant (SI WWTP) is based on the data provided in the 90% SIWWTP Preliminary Engineering Report (R.M. Towill, 2011). The total raw sludge loading presented in the report is listed in **Table 1-1**.

Table 1-1. Sludge Loadings[1]

Year	Influent Flow (mgd)[2]	Average Daily Loading (dtpd)[3]
2012	60	30
2015	---	32.5
2035	85	49.5
2035 w/ Secondary	85	83.5

1. From 90% SIWWTP Preliminary Engineering Report (R.M. Towill, 2011)
2. Million gallons per day (mgd)
3. Dry tons per day (dtpd)

The basis for the evaluation in this report is a 20-year period from 2015 to 2035. It is anticipated that the average sludge load will increase linearly each year. Before the consent decree deadline of December 31, 2035, the SIWWTP will be required to bring secondary treatment online which will significantly increase the sludge loading. However, it is expected that at this time the equipment will be approaching the end of its normal service life, so a significant upgrade and/or equipment replacement would be necessary. The basis for the evaluation does not include a detailed discussion concerning the addition of secondary treatment; however, the report conceptually addresses ways the options could be expanded to handle the future increased loading.

In order to evaluate future options, it is important to fully understand the systems current mass and energy balance. Plant data was collected and analyzed in order to understand the overall throughput and performance of the existing process.

A summary of the digester mass balance is provided in **Table 1-2**. The data presented is based on raw data provided by CCH.

Table 1-2. Summary of Sand Island Digester Data for Fiscal Year 2010-2011

Month	Raw Sludge Feed (dtpd)	Raw Sludge Feed (gpd)	Raw Sludge Solid Content[4]	Raw Sludge VS[1] Content	Digester VSR[5]	Average HRT[6] (days)	Digested Sludge (dtpd)	Digested Sludge Solid Content	Digested Sludge VS[1] Content
Jul-10	29.5	104,308	6.8%	79.3%	61.0%	22.5	15.1	3.7%	60.6%
Aug-10	28.0	108,102	6.2%	77.9%	54.9%	21.7	17.0	3.8%	57.9%
Sep-10	29.7	108,745	6.5%	79.3%	66.8%	21.6	13.6	3.7%	57.5%
Oct-10	28.5	108,695	6.3%	78.2%	57.4%	21.6	16.2	3.7%	58.5%
Nov-10	29.6	113,296	6.3%	78.3%	63.5%	20.7	14.7	3.5%	57.6%
Dec-10	30.9	115,207	6.4%	78.1%	63.7%	20.4	15.7	3.6%	55.6%
Jan-11	31.7	120,487	6.4%	79.3%	57.8%	19.5	18.6	3.7%	57.1%
Feb-11	33.2	123,179	6.4%	79.5%	35.3%[2]	19.1	29.4	3.7%	58.0%
Mar-11	31.0	118,513	6.3%	79.6%	47.7%[3]	19.8	21.5	3.6%	60.0%
Apr-11	31.8	116,903	6.5%	79.4%	62.7%	20.1	15.4	3.7%	61.1%
May-11	31.7	117,840	6.5%	81.9%	53.7%	19.9	18.9	3.8%	63.7%
Jun-11	29.9	119,569	6.4%	81.5%	56.8%	19.7	16.9	3.5%	62.4%
Average	**30.5**	**114,570**	**6.4%**	**79.4%**	**56.8%**	**20.6**	**17.8**	**3.7%**	**59.2%**

1. Volatile solids (VS)
2 .Potential outlier data point in raw data for sludge flow rate going to centrifuge on 2/21/2011. The data presented indicates that 2,199,708 gals of sludge was transferred that day which is 20 times more than the average of 115,000 gal per day.
3. Potential outlier data point in raw data for sludge flow rate going to centrifuge on 3/17/2011. The data presented indicates that 1,012,596 gal of sludge was transferred that day which is 10 times more than the average of 115,000 gal per day.
4. Raw sludge solids content above 6% is not in compliance with the present Synagro contract
5. Volatile solids reduction (VSR)
6. Hydraulic retention time (HRT)

A summary of the consumables for the 2010-2011 fiscal year for the Sand Island Synagro process as provided by Synagro is shown in **Table 1-3**.

Table 1-3. Summary of Synagro's Consumables for Fiscal Year 2010-2011

Consumable	Annual Consumption	Units
Fuel Oil	149,785	gals per yr
Digester Gas in Dryer[1]	13,820,414	SCF[2] per yr
Digester Gas In Hot Water[1]	1,501,939	SCF[2] per yr
Electricity	2,621	MW[3]-hr/yr
Polymer[1]	21,337	lbs per yr
Potable Water	7.99	Mgal[4] per yr

1. Consumable for calendar year 2010
2. Standard cubic feet (SCF)
3. Megawatts (MW)
4. Million gallons (Mgal)

A summary of the hauling data for the 2010-2011 fiscal year from the Sand Island Synagro process is provided in **Table 1-4**. The data presented is based on raw data provided by CCH. As shown below, during the 2010-2011 fiscal year approximately 85% of the dried pellets were beneficially reused and approximately 76% of the total sludge production was beneficially reused. During this period, the average pellet solid content was approximately 94% (data not

shown) and the average solid content of the cake sent to the landfill was approximately 28% (data not shown).

Table 1-4. Summary of Sand Island Hauling Data for Fiscal Year 2010-2011

Month	Total Hauled Solids (DT)	Cake to Land fill (DT)	Pellets Produced (DT)	Pellets Marketed (DT)	Pellets Land filled (DT)	Beneficial Reuse (% of Dried)	Beneficial Reuse (% of Total)
Jul-10	251		251.3	191.2	60.0	76.1%	76.1%
Aug-10	312	141.4	170.1	128.9	41.2	75.8%	41.4%
Sep-10	297	13.3	283.4	218.3	65.1	77.0%	73.6%
Oct-10	326		326.0	275.0	51.1	84.3%	84.3%
Nov-10	290	5.0	285.5	219.3	66.2	76.8%	75.5%
Dec-10	329	11.4	317.4	227.1	90.4	71.5%	69.1%
Jan-11	274	32.0	242.0	210.1	31.9	86.8%	76.7%
Feb-11	303		302.8	302.8	0.0	100.0%	100.0%
Mar-11	343	45.2	297.9	297.9	0.0	100.0%	86.8%
Apr-11	326	79.1	247.1	206.5	40.6	83.6%	63.3%
May-11	286	31.7	254.0	238.9	15.0	94.1%	83.6%
Jun-11	359	48.6	310.8	294.1	16.7	94.6%	81.8%
Average						85.1%	76.0%

The mass balance of the Synagro process was compared to the hauling numbers from the Synagro process and a discrepancy was found indicating that the amount of solids that are hauled offsite is less than what is anticipated to be produced based on the digester, centrifuge and dryer mass balance. The comparison of the centrifuge feed numbers and the hauling numbers is provided in **Table 1-5**. In **Table 1-5**, the digested solids production is estimated based on the totalized gallons of sludge sent to the centrifuge and average digested sludge solid content. The hauled solids numbers are based on the records kept by Synagro. When comparing the data, it was found that the capture rate of the dewatering and drying system averaged only 60%. The data presented indicates that further investigation is required to determine the reason for this discrepancy. One possible reason for the discrepancy is that there is a large amount of solids returned to the primary clarifiers in the dewatering recycle and/or in the dryer's condenser recycle. A second possible explanation is that there is a calibration error in a meter or scale. A third reason for the discrepancy could be another component of the mass balance that is missing from the data provided by Synagro for this study.

Table 1-5. Comparison of the Sand Island Sludge Production and Hauling Data for Fiscal Year 2010-2011

Month	Total Digested Solids Produced (DT)	Average Digested Sludge Average (dtpd)	Total Recorded Hauled Solids (DT)	Average Daily Solids Produced (dtpd)	Capture Rate
Jul-10	466.7	15.1	251.3	8.1	53.8%
Aug-10	525.5	17.0	311.5	10.0	59.3%
Sep-10	407.6	13.6	296.7	9.9	72.8%
Oct-10	503.6	16.2	326.0	10.5	64.7%
Nov-10	441.2	14.7	290.5	9.7	65.8%
Dec-10	487.8	15.7	328.8	10.6	67.4%
Jan-11	576.8	18.6	274.0	8.8	47.5%
Feb-11	824.0[1]	29.4[1]	302.8	10.8	36.8%
Mar-11	667.2[2]	21.5[2]	343.1	11.1	51.4%
Apr-11	462.6	15.4	326.2	10.9	70.5%
May-11	584.6	18.9	285.7	9.2	48.9%
Jun-11	506.6	16.9	359.4	12.0	70.9%
Average		**17.8**		**10.1**	**59.2%**

1. Potential outlier data point in raw data for sludge flow rate going to centrifuge on 2/21/2011
2. Potential outlier data point in raw data for sludge flow rate going to centrifuge on 3/17/2011

The data presented in the preceding **Table 1-1** to **Table 1-5** set the basis for the mass and energy balances developed for the alternatives presented in **Section 2.0**.

2.0 ISSUES ASSOCIATED WITH MODIFICATIONS

2.1 Sludge Screening

From AECOM communications with the dryer manufacturer (Andritz), it is understood that one of the concerns with drying any ratio of undigested primary sludge in the existing direct dryer is the potential for plugging of dryer perforations and other equipment with the fine fibrous material that is present in the raw primary sludge. There is also a concern that the fibrous materials contribute to bulking of the finished product, and severely impair the product screening and recycle. The dryer process includes a sludge screening and separation process to generate pellets of a particular size and hardness and the addition of fibrous material associated with primary sludge can prevent the formation of the desired pellet and instead produce material with a “corn flake” consistency. The digested sludge currently goes through a strain press to remove fibrous materials prior to being dewatered and dried. Any raw primary sludge going to the dryer would require a similar strain press process.

If a low temperature dryer were used (such as a screw, paddle, or belt dryer) the raw undigested primary sludge would also need to be sent through a strain press. The lower temperature dryers, however, may be more suitable to processing undigested primary sludge since they do not incorporate product screening, recycle and pelletization systems that are utilized to produce a product with a uniform size.

2.2 Sludge Blending

The primary sludge from the existing gravity thickeners is presently sent to the four wet sludge storage tanks located on the north side of the existing Solids Handling Building. Each wet sludge storage tank contains a propeller mixer to prevent stratification and provide a homogeneous material to feed to the digesters. For some of the options it will be necessary to segregate the raw primary sludge fed to the anaerobic digester from the raw primary sludge fed to the drying system. The raw sludge fed to the digesters is not screened at present. However the raw primary sludge fed directly to drying system would require screening. A total of four new strain presses are provided on top of the wet sludge storage tanks for the options that include dewatering and drying of raw (undigested) primary sludge. No changes to the existing mixing system are anticipated, since both the digesters and dewatering systems require a homogeneous feed.

For options involving a blend of raw sludge and digested solids the materials are dewatered separately upstream of the dryer. A series of new raw sludge centrifuges, and conveyors are provided for the options where a blend of raw sludge and digested solids are provided. The dewatered raw sludge and digested solids would be blended in the cake storage hopper upstream of the dryer.

It is anticipated that the dried biosolids containing both digested solids and undigested primary sludge would be less desirable from a distribution and marketing perspective. The blended product would be more odorous and have a higher potential to spontaneously combust compared to the current dried biosolids that contain only digested biosolids.

2.3 Sludge Stabilization or Treatment

Four types of stabilization and treatment are considered in this study:

- Thermal drying (heat)

- Anaerobic digestion
- Chemical (lime) stabilization
- Chemical (ferric chloride) odor treatment

Thermal drying (heat), anaerobic digestion and chemical (lime) stabilization processes comply with current EPA 503 regulations for land application. The addition of lime to the raw primary sludge provides stabilization (odor and vector reduction), and is an acceptable PSRP in accordance with the EPA 503 regulations. Ferric chloride can be added to the raw primary sludge to reduce odors. The ferric chloride addition does not qualify as a PSRP, or vector attraction reduction procedure in accordance with the current EPA 503 regulations.

The solids produced at the SIWWTP do not require pathogen reduction or vector control if they are disposed in a secure landfill, or incinerated at H-Power. However, H-Power representatives have indicated that their presently planned project is based on processing digested dewatered sludge. H-Power has not incorporated provisions to handle raw sludge, chemically treated sludge, or dried sludge into their design. A project change will be necessary if CCH intends to process raw sludge, chemically treated sludge, or dried sludge at the H-Power facility. During our investigations for this study H-Power representatives indicated that the raw sludge or chemically treated sludge could have a higher total solids concentration than the digested sludge that are used as the basis of design for their system. This could have an adverse impact on the operation of the cake handling and conveyance systems that are provided. H-Power representatives also indicated that the dried sludge have a higher heat value than the dewatered digested sludge that are used as the basis of design for their system. This could adversely affect the performance of the furnace, and air pollution control systems that are provided.

Based on these considerations CCH has selected the use of ferric chloride to provide odor control of unstabilized sludge in the event that undigested sludge is required to be dewatered and hauled off site for disposal. The cost of including this chemical treatment system have been included in the evaluation of the various options.

2.4 Space Limitations

The existing Solids Handling Building was originally constructed to accommodate multiple hearth incinerators. It was retrofitted to house a thermal conditioning (Zimpro) process. The building was retrofitted again to house the present digestion, dewatering, and drying facilities (operated by Synagro). There is no space within the current centrifuge dewatering area, or the rotary dryer area to house additional or new equipment. The garage bay to the north of the dryer wing of the existing building is partially used to house the digester feed pumps, and digester sludge heating equipment. There is some opportunity to install additional or new equipment within the garage bay (such as centrifuge feed pumps, sludge grinders, etc.). There appears to be space on the roof of the garage bay, and adjacent wet sludge storage tanks to install raw primary sludge screening equipment (strain presses) and raw sludge dewatering equipment (centrifuges).

The planned location of the additional or new equipment for all of the options will be within the confines of the existing Solids Handling Building to avoid impacting planned future secondary treatment facilities. The cost estimates are based on new building enclosures to house centrifuges required to dewater raw primary sludge, and include extra floor space to allow additional centrifuges to be installed in the future to provide secondary sludge processing capacity from the SIWWTP secondary treatment system. Cost estimates do not include

facilities or building space to process solids from outside sources, or other CCH WWTP located on Oahu.

2.5 Odor Control

The cost estimates include ventilation and biological odor control systems to treat air exhausted from the new raw sludge dewatering systems for various options. Several options involve hauling of dewatered raw sludge cake. These options are based on using covered dump trailers to control off site odors during transport to H-Power. Option 1, 2 and 3 includes ferric chloride chemical addition to provide odor control. The H-Power facility is intended to provide odor control facilities adequate for handling anaerobically digested sludge. The current H-Power sludge receiving design does not include provisions to process sludge containing chemical additives (such as lime, or ferric chloride) or handling raw undigested sludge.

2.6 Use of Digester Biogas and Supplemental Fuel

The current direct dryer requires a premium heat source for proper operation and thus cannot operate with low or medium temperature waste heat. According to Synagro, the current dryer also cannot operate on 100% digester gas, since doing so causes an unsafe condition with respect to oxygen content. Synagro stated that they have to use 20 to 25% fuel oil in order to maintain safe conditions for operation of the dryer and the dryer's burner. This issue would not be a limitation for an indirectly fired dryer where the flue gas is completely separated from the sludge.

Due to the rising cost of purchased energy and the developments in waste to energy technology, consideration should be given incorporating a CHP cogeneration to beneficially use the anaerobic digester biogas. Cost savings from the offset power demands typically have a short payback period on the capital investment and also provide a source of waste heat that can be used in other processes such as digester heating.

Low temperature indirectly fired dryers are capable of using a lower quality heat source for drying and would be capable of using a portion of the waste heat available from CHP cogeneration. However, it is unlikely that CHP cogeneration waste heat alone would be adequate for drying all the dewatered solids produced at the facility.

3.0 DESCRIPTION OF OPTIONS

A total of seven alternative options were evaluated and compared to the baseline recommendation of building a new digester and continuing with the current operation. The potential and applicability of incorporating a CHP system is also discussed where appropriate. A summary of the alternatives evaluated is provided below.

3.1 Baseline: Build New Digester and Continue to Operate Existing Dryer

The baseline option is the one recommended in the current master plan that consists of building a second identical digester and continuing to operate the current drying and pelletization system. Implementing the baseline option would require the following new equipment:

- One new 2.35 million gallon digester
- One new digested sludge storage tank

An option (Baseline case b) was also evaluated which considers incorporating a CHP system to generate power from the excess gas that is not used in the dryer. For the option with CHP, it is anticipated that the dryer would operate 24 hours and 6 days a week to minimize the dryer's digester gas consumption and maximize the available digester gas for CHP. The high operating time also allows each centrifuge to process the total sludge loading with one unit out of service thus maintaining full redundancy with dewatering.

Advantages and disadvantages for the baseline option are presented in **Table 3-1**. **Figure 3-1** shows a process flow schematic for the baseline condition.

Table 3-1. Baseline Case Advantages and Disadvantages

Advantages	Disadvantages
• Significant volume reduction • Pellets can be sent to H-Power for Energy Recovery or distributed as a Class A agricultural product • Digested dewatered cake can be distributed as Class B or land filled if dryer is down • Potential for onsite energy generation (CHP) • Well proven processes • Existing assets are utilized • Operation staff is familiar with the process (only applies if Synagro operation is maintained or CCH staff are trained in dryer operation) • Provides redundancy with current digestion process • Fossil fuels for drying offset with use of digester gas • This alternative can be used as part of a phased approach when secondary treatment is brought online as it covers solids handling needs until 2035 freeing up the designer of the secondary facility from limitations. • Provides back up and capacity in the event SIWWTP needs to provide solid handling assistance with solids handling from another CCH facility	• High capital cost for new digester • Existing dryer not capable of using waste heat from a CHP process • Heat value of pellets is reduced due to digestion • Current dryer cannot operate using 100% digester gas as the fuel. • Higher comparative cost for disposal of pellets at H-Power than necessary if this option is exercised. • The economics of pelletizing operation does not account for adding capacity to the original construction.

Figure 3-1. Process Flow Schematic – Baseline Condition

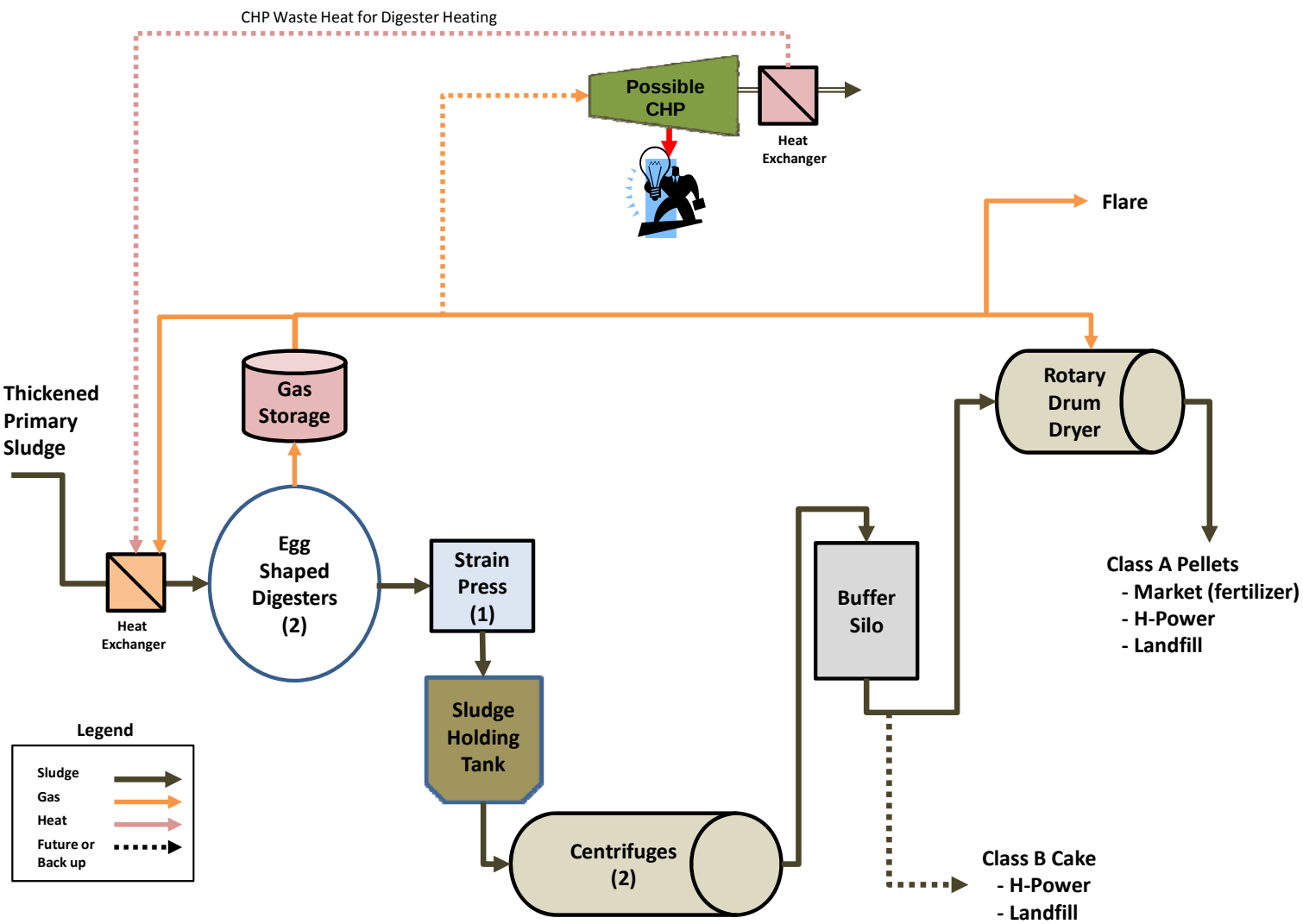

3.2 Option 1: Dewater Excess Raw Undigested Primary Sludge and Transfer the Cake Material to H-Power

Option 1 consists of operating the current digestion and drying / pelletization facility as currently loaded. Any excess residuals that cannot go through the digester would be chemically treated with Ferric Chloride, dewatered and hauled to H-Power for incineration. Digested dried pellets would either continue to be marketed by Synagro in accordance with the existing service agreement or could be sent to H-Power for incineration. Implementing Option 1 would require the following new equipment:

- Two new centrifuges dedicated to dewatering undigested sludge
- Two new rotary lobe pumps
- Two new sludge grinders
- Two new cake conveyors one to collect cake discharged from the centrifuges, the other to transport dewatered cake from the centrifuge discharge conveyor to the proposed truck loading station
- Chemical (ferric chloride) feed system
- Odor control for the raw sludge dewatering

The additional equipment would process undigested sludge separately from the digested sludge processed in the existing equipment so redundancy is incorporated to account for downtime and maintenance. For sizing, it is anticipated that the additional raw cake dewatering equipment would operate less than 56 hours per week to balance with the anticipated transport schedule. Also since the digested and undigested cakes are processed separately full redundancy is incorporated into the additional centrifuge.

The digester gas produced from the existing digester would continue to be beneficially reused for dryer and digester heating which leaves little excess gas left over so an additional CHP adder is not included with this option. Advantages and disadvantages for Option 1 are presented in **Table 3-2**. **Figure 3-2** shows a process flow schematic for Option 1.

Table 3-2. Option 1 Advantages and Disadvantages

Advantages	Disadvantages
• Lower capital cost than building a new digester • Volume reduction for digested / dried product • Pellets can be land applied or sent to H-Power for Energy Recovery • Digested cake can be distributed as Class B or land filled if dryer is down • Well proven processes • Existing assets are utilized • Operation staff is familiar with the process (only applies if Synagro operation is maintained or CCH staff are trained in dryer operation) • Higher dewatering solid content possible with raw primary sludge • Raw primary has a higher Btu value than digested sludge • Fossil fuels for drying offset with use of digester gas	• Requires landfill disposal if H-Power cannot process cake due to maintenance • No redundancy in existing digestion process • There is not currently a market identified that would accept Class B sludge and landfilling may not be an option in the future • Higher odor potential for raw cake at SI WWTP and H-Power • Current dryer cannot operate using 100% digester gas as the fuel. • Chemical treatment facilities with redundancy required • Staff is required to operate two different systems • H-Power would need to modify existing design/permitting to handle undigested sludge.

Figure 3-2. Process Flow Schematic – Option 1

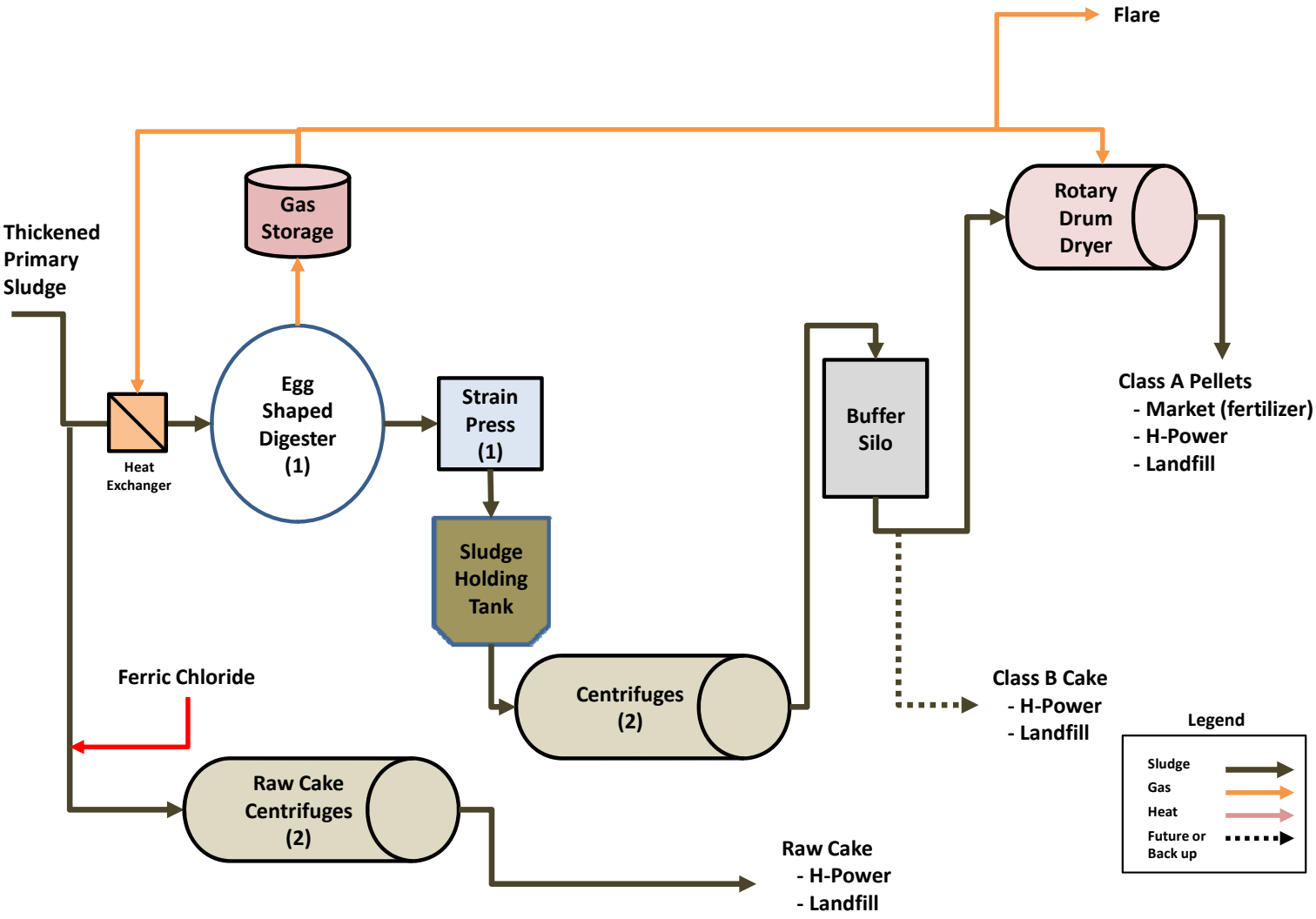

3.3 Option 2: Dewater Blend of Digested and Undigested Primary Sludge and Transfer the Cake Material to H-Power

Option 2 consists of operating the current digestion facility as currently loaded but differs from Option 1 as the drying and pelletization facility is taken offline. Any excess residuals that cannot go through the digester would be dewatered and chemically treated. The digested and chemically treated sludge cake would be hauled to H-Power for incineration. Implementing Option 2 would require the following new equipment:

- Two new centrifuges dedicated to dewatering undigested sludge
- Two new rotary lobe pumps
- Two new sludge grinders
- Two new cake conveyors to transport dewatered cake from the centrifuge to a truck loading station
- Chemical (ferric chloride) feed system
- Odor control for the raw sludge dewatering

The additional equipment would process undigested sludge separately from the digested sludge processed in the existing equipment so redundancy is incorporated to account for downtime and maintenance. For sizing it is assumed that the additional raw cake dewatering equipment would operate less than 56 hours per week to balance with the anticipated transport schedule. Since the digested and undigested cakes are processed separately full redundancy is incorporated into the undigested dewatering system with an additional centrifuge. An additional option (Option 2b) was also evaluated which incorporates a CHP system into the process to beneficially use the digester gas for power production.

Advantages and disadvantages for Option 2 are presented in **Table 3-3**. **Figure 3-3** shows a process flow schematic for Option 2.

Table 3-3. Option 2 Advantages and Disadvantages

Advantages	Disadvantages
• Lower capital cost than building a new digester • Potential for onsite energy generation (CHP) • Some volume reduction for digested product • Digested dewatered cake can be distributed as Class B or land filled • Well proven and simple technologies • Operation staff is familiar with the process (only applies if Synagro operation is maintained or CCH staff are trained in dryer operation) • Higher dewatering solid content possible with raw primary sludge • Raw primary has a higher Btu value than digested sludge • Eliminates operating cost for drying/pelletization	• Requires landfill disposal if H-Power cannot process undigested cake • Larger hauling volume requirement than options inclusive of dryers • No redundancy in existing digestion process • There is not currently a market identified that would accept Class B sludge and landfilling may not be an option in the future • Higher odor potential for raw cake at SI WWTP and H-Power • Residual cake production may exceed excess mass throughput capacity at H-Power (90 tons/day) • Use of waste heat from the CHP process (if added) is limited to digester heating, it cannot be used by the existing dryer • Requires chemical treatment facilities • H-Power would need to modify existing design/permitting to handle undigested sludge.

Figure 3-3. Process Flow Schematic – Option 2

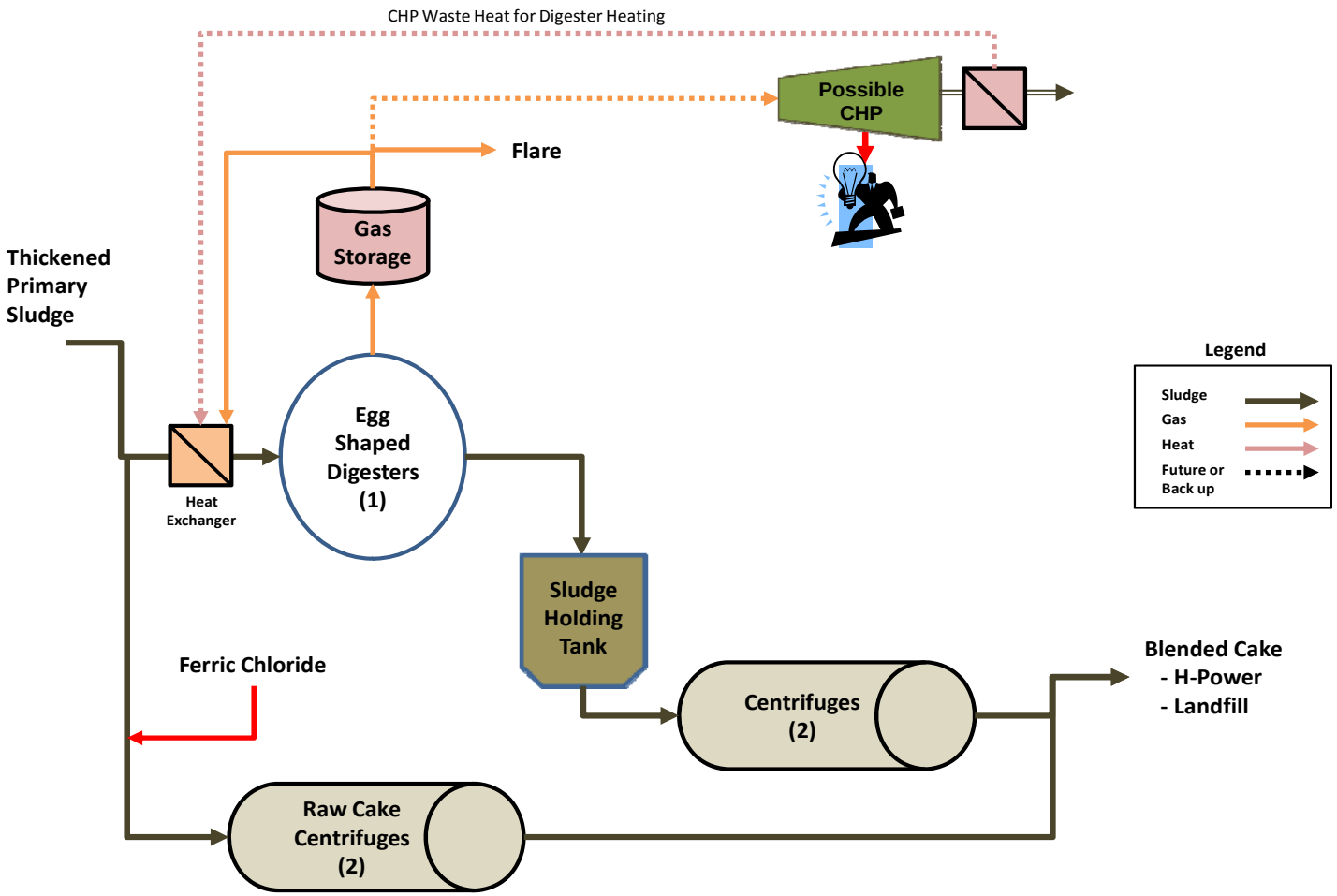

3.4 Option 3: Dewater Undigested Primary Sludge with Chemical Sludge Stabilization and Transfer the Cake material to H-Power for Incineration

Option 3 consists of taking the digester and drying / pelletization system offline. All undigested residuals would be chemically treated with Ferric Chloride, dewatered and transported to the H-Power incinerator. Implementing Option 3 would require the following new equipment:

- Three new centrifuges dedicated to dewatering undigested sludge
- Three new rotary lobe pumps
- Three new sludge grinders
- Three new cake conveyors to transport dewatered cake from the centrifuge to a truck loading station
- Chemical (ferric chloride) feed system
- Odor control for the raw sludge dewatering

The additional equipment incorporates at least one redundant unit to account for downtime and maintenance. For sizing, it is assumed that the raw cake dewatering equipment would operate less than 56 hours per week to balance with the anticipated transport schedule.

Advantages and disadvantages for Option 3 are presented in **Table 3-4**. **Figure 3-4** shows a process flow schematic for Option 3.

Table 3-4. Option 3 Advantages and Disadvantages

Advantages	Disadvantages
• Lower capital cost than building a new digester • Well proven and simple technologies • Higher dewatering solid content possible with raw primary sludge • Raw primary has a higher Btu value than digested sludge • Eliminates operating cost of the digestion system • Eliminates operating cost for drying / pelletization	• Requires alternate disposal (such as composting or landfill disposal) if H-Power cannot process chemically treated cake • There is not currently a market identified that would accept Class B sludge and landfilling may not be an option in the future • Largest hauling volume requirement of all options considered • Requires operation of chemical treatment facilities • Residual cake production exceeds excess mass capacity at H-Power for cake (90 tons/day) requiring expansion of H-Power facility • Greater odor problems during transport • H-Power would need to modify existing design/permitting to handle undigested sludge.

Figure 3-4. Process Flow Schematic – Option 3

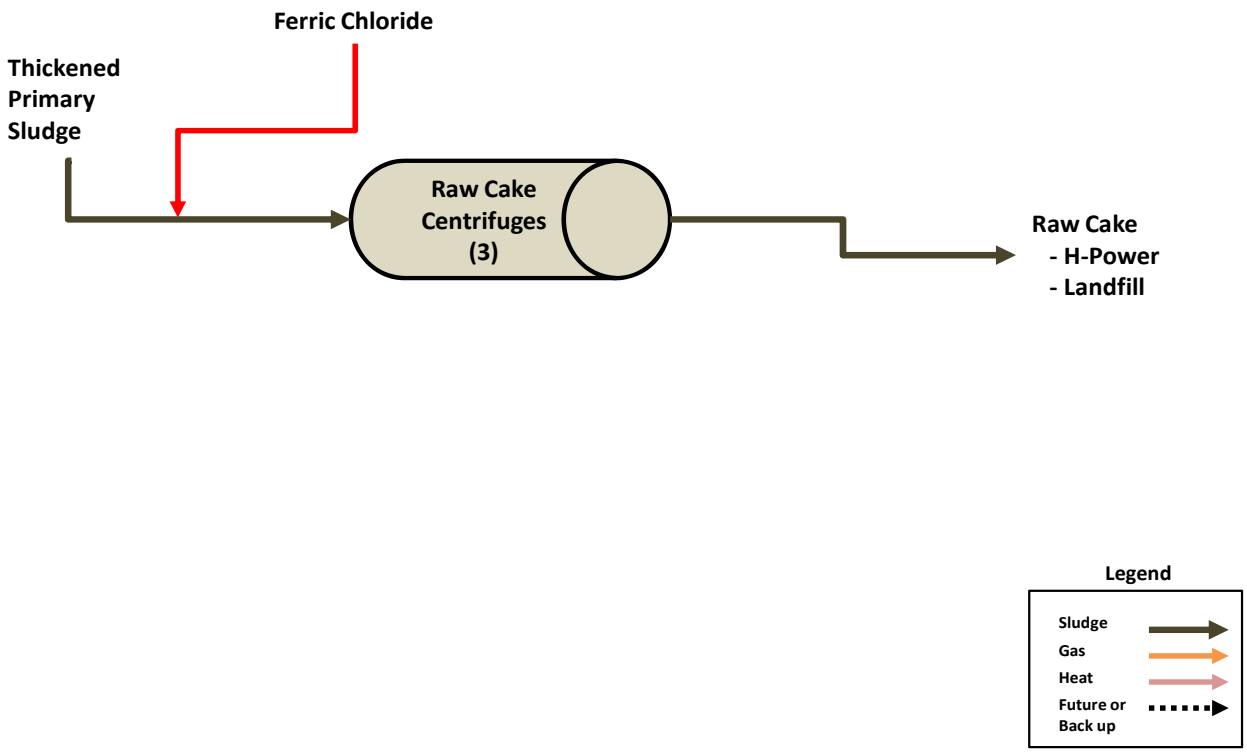

3.5 Option 4: Dry Blended Digested and Undigested Sludge Using Existing Dryer

Option 4 consists of operating the current digestion and drying / pelletization facility but differs from Option 1 as the undigested sludge cake will be blended with the digested sludge cake in the existing feed hopper and sent to the dryer. The dried pellets could continue to be marketed by Synagro in accordance with the existing service agreement or could be hauled to H-Power for incineration. Implementing Option 4 would require the following new equipment:

- One new centrifuge dedicated to dewatering undigested sludge
- One new rotary lobe pump
- One new sludge grinder
- Four new strain presses for raw sludge prior to the dryer
- One new cake conveyor to transport dewatered cake from the centrifuge to the existing dryer feed hopper
- Chemical (ferric chloride) feed system
- Odor control for the raw sludge dewatering

The additional equipment adds redundancy and reliability to account for downtime and maintenance. The new centrifuge would be dedicated to dewatering raw primary sludge, however, the existing centrifuges would be set up to also allow for dewatering of raw primary sludge. For sizing, it is anticipated that the dewatering equipment can operate up to 24 hours a day, 6 days a week to allow for semi-continuous operation of the existing dryer. With the higher runtime and dual use of the existing centrifuges only one additional centrifuge is required to provide a full redundant spare to account for equipment downtime and maintenance.

It is important to note that the current dryer supplier, Andritz, has expressed concerns with this option and states that their dryer is not designed to adequately handle any quantity of undigested primary sludge. Synagro has indicated that they would be willing to experiment drying a blend of sludge consisting of 20% undigested primary. Based on the mass balance analysis and stated digester capacity, drying a greater than 20% blend will be required after year 2021. At year 2035, it is anticipated that the required blend would approach 50% undigested sludge if additional digestion capacity is not added.

The digester gas produced from the existing digester would continue to be beneficially reused for dryer and digester heating which leave little excess gas left over so an additional CHP adder is not included with this option.

Advantages and disadvantages for Option 4 are presented in **Table 3-5**. **Figure 3-5** shows a process flow schematic for Option 4.

Table 3-5. Option 4 Advantages and Disadvantages

Advantages	Disadvantages
• Lower capital cost than building a new digester • Hauling volume reduction • Pellets can be land applied or sent to H-Power for Energy Recovery • Digested dewatered cake can be distributed as Class B or land filled if dryer is down • Operation staff is familiar with the process (only applies if Synagro operation is maintained or CCH staff are trained in dryer operation) • Higher dewatering solid content possible with raw primary sludge • Raw primary has a higher Btu value than digested sludge so pellet Btu would increase as primary sludge fraction increases • Fossil fuels for drying offset with use of digester gas	• Operation not recommended by dryer vendor • No redundancy in existing digestion process • There is not currently a market identified that would accept Class B sludge and landfilling may not be an option in the future • Chemical treatment facilities are required as a back-up for processing raw cake (if dryer is offline) • Pellets with undigested sludge may have higher odors and be less stable (i.e. fire risk) • Dryer feed may be less uniform (due to blend of two different types of sludge cake) which could lead to instability in dryer operation • Current dryer cannot operate using 100% digester gas as the fuel • Exceeds capacity of current dryer requiring expansion in the later years of the planning period

Figure 3-5. Process Flow Schematic – Option 4

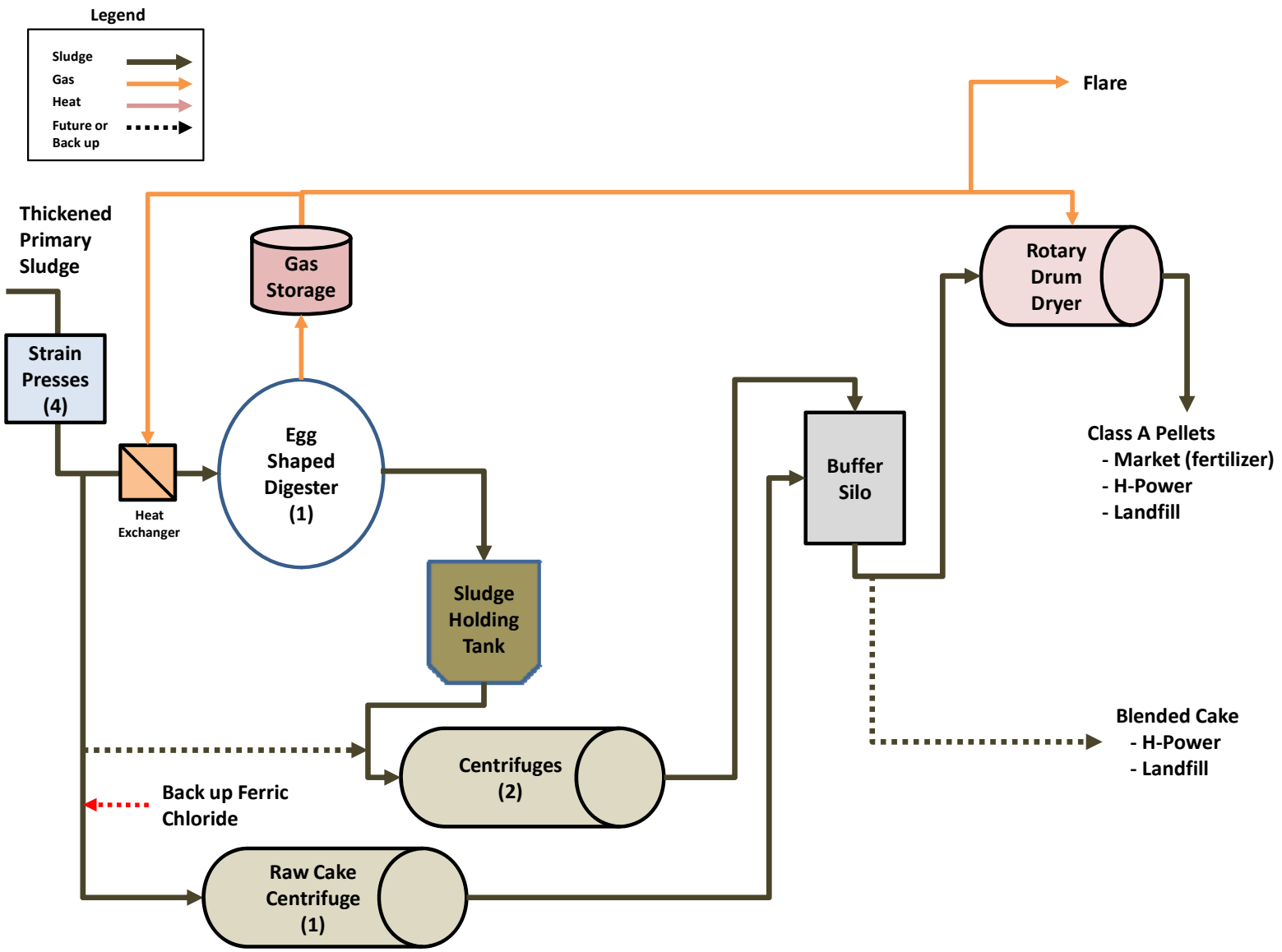

3.6 Option 5: Dry Blended Digested and Undigested Sludge Using New Dryer

Option 5 consists of operating the current digester but replacing the dryer with one that is more suitable to process undigested sludge than the current dryer. In this option, undigested sludge that cannot be processed through the existing digester would be dewatered and the undigested sludge cake would be blended with the digested sludge cake in the cake hopper and sent to the new dryer. The replacement dryer would be a lower temperature dryer that may be more suitable to utilize waste heat from a CHP system if added in the future. The dried solids could continue to be marketed or hauled to H-Power for incineration. Implementing Option 5 would require the following new equipment:

- One new low temperature dryer capable of processing undigested sludge
- One new centrifuge dedicated to dewatering undigested sludge
- One new rotary lobe pump
- One new sludge grinder
- Four new strain presses
- One new cake conveyor to transport dewatered cake from the centrifuge to the new dryer
- Chemical (ferric chloride) feed system
- Odor control for the raw sludge dewatering

Four suppliers (Therma-Flite, Komline, Kruger, & Huber) were contacted to determine what systems may be more suitable to process primary sludge. Therma-Flite and Komline provide indirect conduction style dryers while Kruger and Huber provide convection belt dryers. Due to space constraints and cost, the belt dryers were not considered suitable. Both Therma-Flite and Komline provided budgetary pricing for Option 5. A more detailed discussion of the alternative dryer suppliers is provided in **Section 4.0** of this report.

The new equipment adds additional redundancy to account for downtime and maintenance. The new centrifuges will be dedicated to dewatering raw primary; however, the existing centrifuges would be set up to also allow for dewatering of raw primary. For sizing, it is anticipated that the dewatering equipment can operate up to 24 hours a day, 6 days a week to allow for semi-continuous operation of the new dryer. With the higher runtime and dual use of the existing centrifuges only one additional centrifuge is required to provide a full redundant spare to account for equipment downtime and maintenance. Redundancy was not built into the new dryer sizing; however, the dryer was sized for a maximum of 85% uptime to incorporate some downtime for routine maintenance and cleaning. In the event of an unplanned outage, the dewatered cake would be hauled to H-Power or land filled.

A second case (Option 5b) was also evaluated that included adding a CHP system to produce power from the generated digester gas. The CHP system was also anticipated to provide waste heat to offset some of the fossil fuel requirements in the drying and digester heating systems. For the option with CHP, it is anticipated that the dryer would operate 24 hours a day, 6 days a week to maximize the recovery of CHP waste heat for drying.

Advantages and disadvantages for Option 5 are presented in **Table 3-6**. **Figure 3-6** shows a process flow schematic for Option 5.

Table 3-6. Option 5 Advantages and Disadvantages

Advantages	Disadvantages
• Lower capital cost than building a new digester • Hauling volume reduction • Dried solids can be land applied or sent to H-Power for Energy Recovery • Digested dewatered cake can be distributed as Class B or land filled if dryer is down • Higher dewatering solid content possible with raw primary sludge • Raw primary has a higher Btu value than digested sludge so dried solids Btu would increase as primary sludge fraction increases • Fossil fuels for drying can be offset with digester gas or CHP waste heat • Potential for onsite energy generation (CHP) • Potential to increases overall efficiency (electrical + thermal) for CHP options	• Limited experience from the drying vendors for the application of drying raw undigested primary sludge • No redundancy in existing digestion process • Chemical treatment facilities are required as a back-up for processing raw cake (if dryer is offline) • There is not currently a market identified that would accept Class B sludge and landfilling may not be an option in the future • Dried solids with undigested sludge may have higher odors and be less stable (i.e. fire risk) • New equipment requires additional operator training • Final product is more granular as opposed to a uniform pellet which could be more difficult to market as a fertilizer product • Dryer feed may be less uniform (due to blend of two different types of sludge cake) which could lead to instability in dryer operation • The life span of the existing relatively new direct dryer is not fully utilized

Figure 3-6. Process Flow Schematic – Option 5

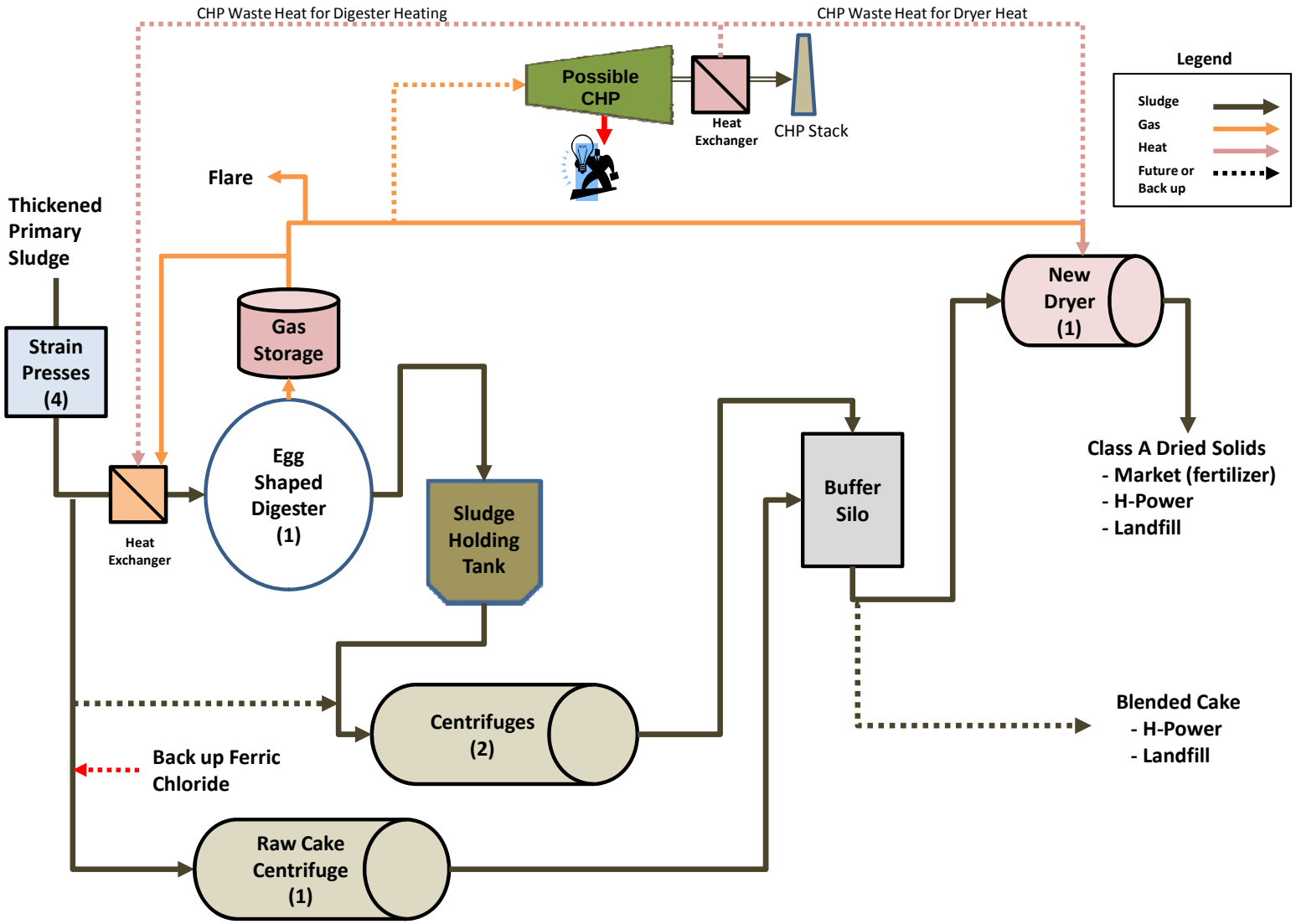

3.7 Option 6: Dry All Undigested Sludge Using New Dryer

Option 6 consists of taking the digester offline and replacing the dryer with one that is more suitable to process undigested sludge than the current dryer. In this option, undigested sludge is dewatered and the undigested sludge cake is sent to the dryer. The dried solids could continue to be marketed or hauled to H-Power for incineration. Implementing Option 6 would require the following new equipment:

- Two new low temperature dryers capable of processing undigested sludge
- One new centrifuge dedicated to dewatering undigested sludge
- One new rotary lobe pump
- One new sludge grinder
- Four new strain presses
- One new cake conveyor to transport dewatered cake from the centrifuge to the new dryer
- Chemical (ferric chloride) feed system
- Odor control for the raw sludge dewatering

Four suppliers (Therma-Flite, Komline, Kruger, & Huber) were contacted to determine what systems may be more suitable to process raw primary sludge. Therma-Flite and Komline provide indirect conduction style dryers while Kruger and Huber provide belt dryers. Due to space constraints and cost, the belt dryers were not considered suitable. Komline declined to quote a dryer for Option 6 stating that their dryer was not suitable to handle 100% undigested primary sludge. A more detailed discussion of the dryer suppliers is provided in **Section 4.0** of this report.

The existing centrifuges will be dedicated to dewatering raw primary and are sized to handle the full load with both operating; however, a new centrifuge is required for redundancy. For sizing, it is assumed that the dewatering equipment can operate up to 24 hours a day, 6 days a week to allow for semi-continuous operation of the new dryer.

Advantages and disadvantages for Option 6 are presented in **Table 3-7**. **Figure 3-7** shows a process flow schematic for Option 6.

Table 3-7. Option 6 Advantages and Disadvantages

Advantages	Disadvantages
• Hauling volume reduction • Dried solids can be land applied or sent to H-Power for Energy Recovery • Higher dewatering solid content possible with raw primary sludge • Raw primary has a higher Btu value than digested sludge so dried solids Btu would increase • Includes two (2) dryers for redundancy • Eliminates operating cost of the digestion system	• Limited experience from the drying vendors for the application of drying raw undigested sludge • 100% of the drying thermal energy from fossil fuels • Chemical treatment facilities are required as a back-up for processing raw cake (when dryers are offline) • Dried solids consisting of 100% primary may have higher odors and could be less stable (i.e. fire risk) • New equipment requires additional operator training • Final product is more granular as opposed to a uniform pellet which could be more difficult to market as a fertilizer product • The life span of the existing relatively new direct dryer is not fully utilized

Figure 3-7. Process Flow Schematic – Option 6

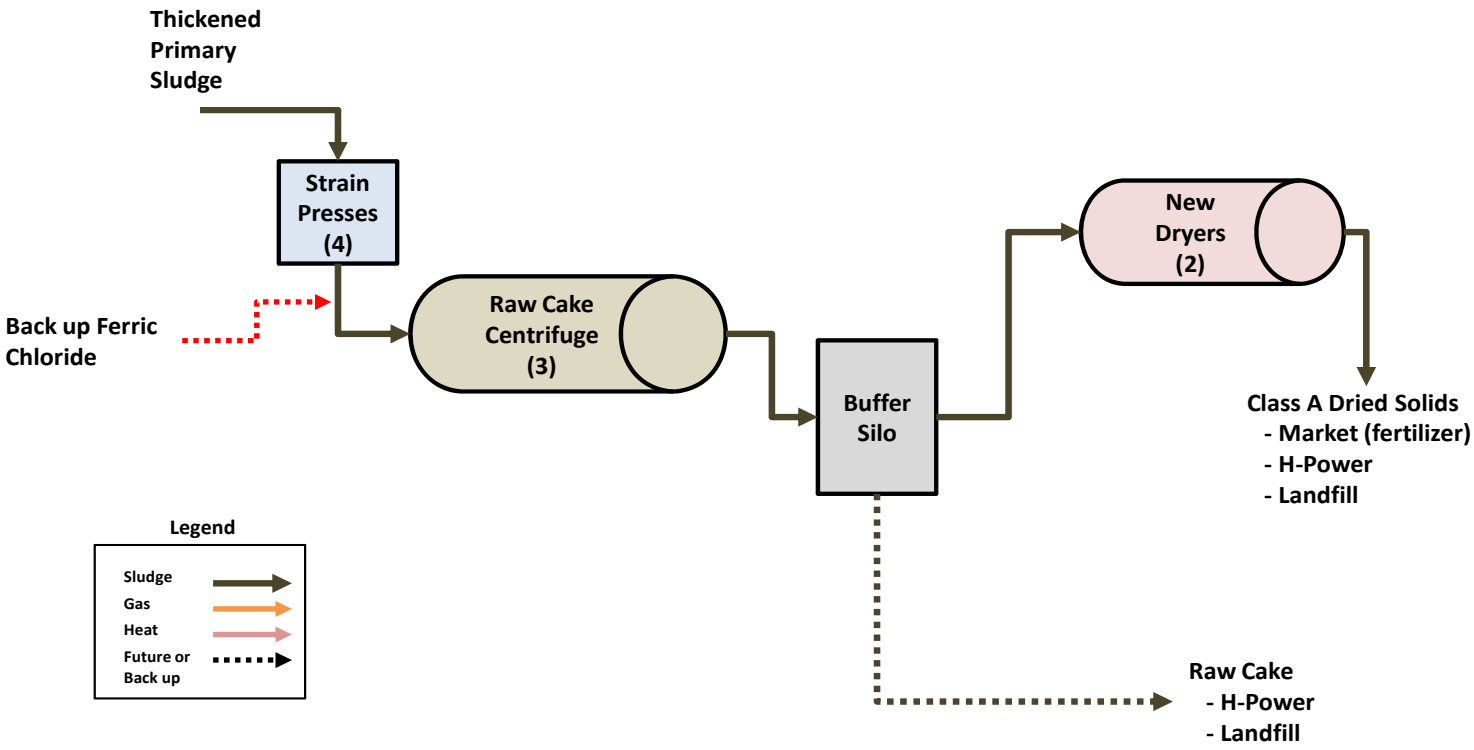

3.8 Option 7: Build a Second Digester and Replace Dryer With One That Operate Utilizing CHP Waste Heat

Option 7 expands on the current master plan recommendation that consists of building a second digester; however, the drying system would be replaced with one that is more suitable to utilize CHP waste heat. The intent of using waste heat from CHP is to improve overall energy efficiency of operation (both electrical and heat). The dried solids could continue to be marketed or hauled to H-Power for incineration. Option 7 also includes adding a CHP system to generate power from the digester gas while also producing waste heat that offsets the drying and digester supplemental fuel requirements. Implementing Option 7 would require the following new equipment:

- One new 2.35 million gallon digester
- One new digested sludge storage tank
- One new low temperature dryer
- One CHP system with heat recovery heat exchangers

The additional equipment adds redundancy to account for downtime and maintenance. The high operating time also allows each centrifuge to process the total sludge loading with one unit out of service thus maintaining full redundancy with dewatering while not requiring the addition of a new centrifuge. The CHP system is also assumed to provide waste heat to offset some of the fossil fuel requirements in the drying and digester heating systems. For sizing, it is assumed that the dryer and dewatering equipment would operate 24 hours and 6 days a week to maximize the recovery of CHP waste heat for drying. Redundancy was not built into the new dryer sizing; however, the dryer was sized for a maximum of 85% uptime to incorporate some downtime for routine maintenance and cleaning. In the event of an unplanned outage, the dewatered cake would be hauled to H-Power or landfilled.

Advantages and disadvantages for Option 7 are presented below in **Table 3-8**. **Figure 3-8** shows a process flow schematic for Option 7.

Table 3-8. Option 7 Advantages and Disadvantages

Advantages	Disadvantages
• Significant volume reduction • Dried solids can be land applied or sent to H-Power for Energy Recovery • Digested dewatered cake can be distributed as Class B or landfilled if dryer is down • Onsite energy generation (CHP) • Provides redundancy with current digestion process • Fossil fuels for drying offset with use of CHP waste heat • Increases overall efficiency (electrical + thermal) for CHP options	• High capital cost for new digester + new dryer • Final product is more granular as opposed to a uniform pellet which could be more difficult to market as a fertilizer product • The life span of the existing relatively new direct dryer is not fully utilized

A summary of the mass and energy balance for each of the options are presented in **Table 3-9** for year 2015 and for year 2030.

Figure 3-8. Process Flow Schematic – Option 7

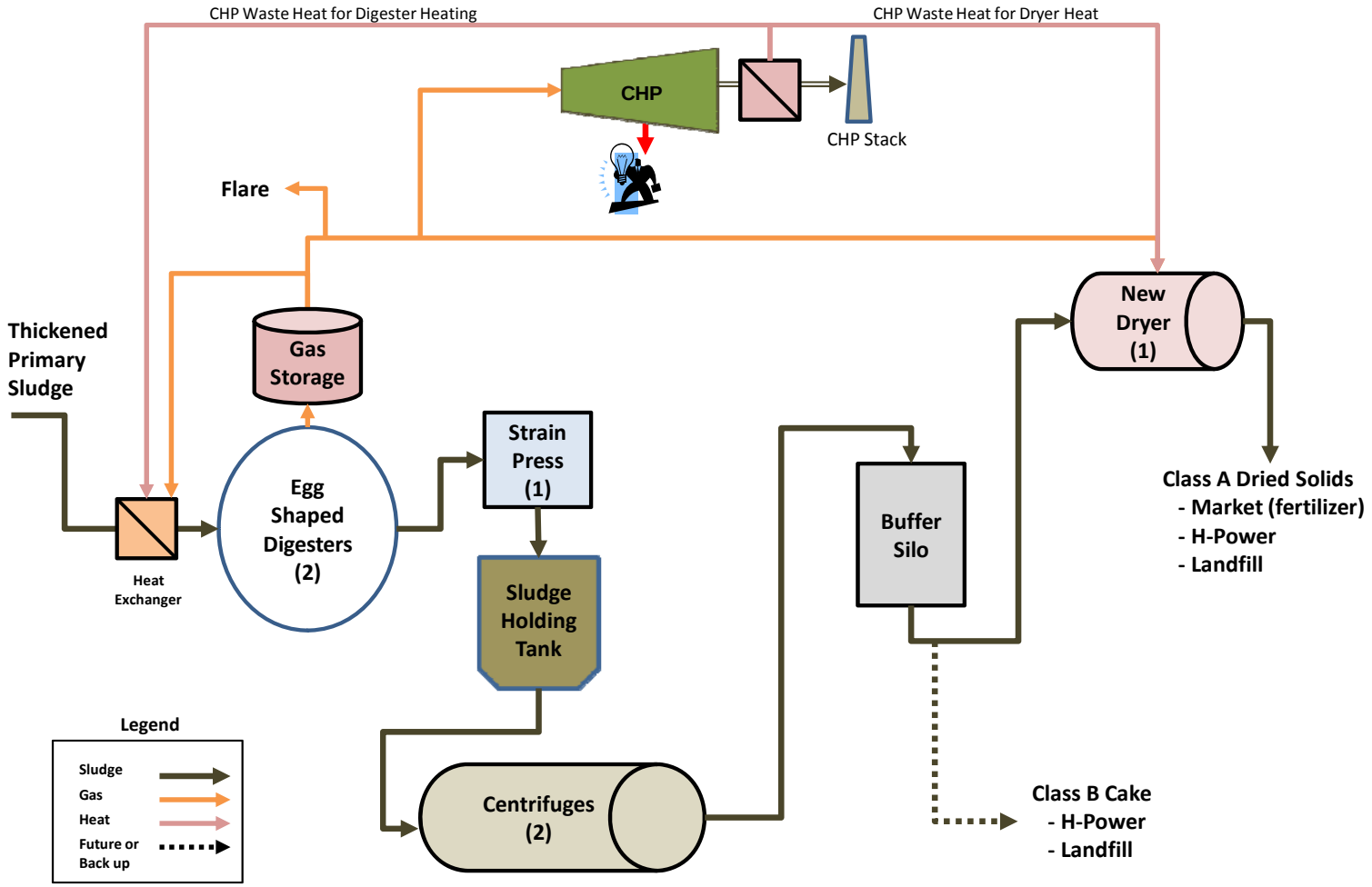

Table 3-9. 2015 Mass and Energy Balance Summary

	Baseline	Baseline w/ CHP	Option 1	Option 2	Option 2b	Option 3	Option 4	Option 5	Option 5b	Option 6	Option 7	Units
Mass To Digester	32.5	32.5	32.5	N/A	32.5	32.5	32.5	N/A	32.5	32.5	32.5	dtpd
Digested Sludge	18.2	18.2	18.2	N/A	18.2	18.2	18.2	N/A	18.2	18.2	18.2	dtpd
Digester Gas Production	10.7	10.7	10.7	N/A	10.7	10.7	10.7	N/A	10.7	10.7	10.7	MMBtu/hr
Raw Sludge	0.0	0.0	0.0	32.5	0.0	0.0	0.0	32.5	0.0	0.0	0.0	dtpd
Polymer Consumption	26,608	26,608	26,608	47,513	26,608	26,608	26,608	47,513	26,608	26,608	26,608	lb/yr
Dried Sludge Production	17.3	N/A	N/A	N/A	17.3	17.3	17.3	30.9	17.3	17.3	N/A	dtpd
Dry Sludge Solid Content	92%	N/A	N/A	N/A	92%	92%	92%	92%	92%	92%	N/A	
Dryer Operation Hours	3,758	N/A	N/A	N/A	4,147	4,597	7,488	3,621	7,488	3,758	N/A	hrs/yr
Dryer Feed Rate	3,363	N/A	N/A	N/A	3,047	2,750	1,688	6,232	1,688	3,363	N/A	dry lb/hr
Dryer Evaporative Load	8,800	N/A	N/A	N/A	7,974	7,195	4,417	11,032	4,417	8,800	N/A	lb H_2O/hr
Dryer Heat Requirement	14.1	N/A	N/A	N/A	12.8	10.4	6.4	16.0	6.4	14.1	N/A	MMBtu/hr
Supplemental Fossil Fuel Requirement	4.3	N/A	N/A	N/A	3.2	0.6	4.3	16.0	4.3	4.3	N/A	MMBtu/hr
Annual Fuel Oil Requirement	116,016	N/A	N/A	N/A	95,861	20,410	230,950	419,777	230,950	116,016	N/A	gal/yr
Digester Gas Used for Digester / Dryer Heating	10.7	0.9	0.0	N/A	10.5	10.7	0.0	N/A	0.0	10.7	0.9	MMBtu/hr
Digester Gas to CHP	0.0	0.0	10.7	N/A	0.0	0.0	10.7	N/A	10.7	0.0	0.0	MMBtu/hr
CHP Electrical Production	N/A	N/A	1,195	N/A	N/A	N/A	1,195	N/A	1,195	N/A	N/A	kW
Average Digester Gas Flared	0.0	9.8	0.0	N/A	0.3	0.0	0.0	N/A	0.0	0.0	9.8	MMBtu/hr
Ferric	0	0	0	451,378	0	0	0	0	0	0	0	gal/yr
Cake Production	0	17.3	17.3	30.9	0	0	0	0	0	0	17.3	dtpd
Cake Solid Content	N/A	27.0%	27.0%	35.0%	N/A	N/A	N/A	N/A	N/A	N/A	27.0%	
Annual Electrical Consumption	2,602	949	949	470	2,590	1,476	1,800	1,108	2,132	2,602	949	MW-hr/yr
Total Mass Hauled offsite	**18.8**	**64.1**	**64.1**	**88.3**	**18.8**	**18.8**	**18.8**	**33.6**	**18.8**	**18.8**	**64.1**	**wtpd**
Estimated Number of Trucks (20yd^3)	1.4	3.6	3.6	5.0	1.4	1.4	1.4	2.5	1.4	1.4	3.6	trucks per day
Average Solid Content	92.0%	27.0%	27.0%	35.0%	92.0%	92.0%	92.0%	92.0%	92.0%	92.0%	27.0%	
Average Volatile Content	64.3%	64.3%	64.3%	80.0%	64.3%	64.3%	64.3%	80.0%	64.3%	64.3%	64.3%	
Effective Heat of Combustion (Estimated)	7,400	1,500	1,500	3,100	7,400	7,400	7,400	9,600	7,400	7,400	1,500	Btu/lb
Number of Operators	5	4	5	4	5	5	5	5	5	5	4	
Days Per Week	5	5	5	5	6	6	7	6	7	5	5	days/week
Hours Per Year	10,400	8,320	10,400	8,320	12,480	12,480	14,560	12,480	14,560	10,400	8,320	hours/yr

Table 3-10. 2035 Mass and Energy Balance Summary

	Baseline	Baseline w/ CHP	Option 1	Option 2	Option 2b	Option 3	Option 4	Option 5	Option 5b	Option 6	Option 7	Units
Mass To Digester	49.5	49.5	32.6	32.6	32.6	N/A	32.6	32.6	32.6	N/A	49.5	dtpd
Digested Sludge	27.7	27.7	18.3	18.3	18.3	N/A	18.3	18.3	18.3	N/A	27.7	dtpd
Digester Gas Production	16.3	16.3	10.8	10.8	10.8	N/A	10.8	10.8	10.8	N/A	16.3	MMBtu/hr
Raw Sludge	0.0	0.0	16.9	16.9	16.9	49.5	16.9	16.9	16.9	49.5	0.0	dtpd
Polymer Consumption	40,471	40,471	51,326	51,326	51,326	72,270	51,326	51,326	51,326	72,270	40,471	lb/yr
Dried Sludge Production	26.3	26.3	17.3	N/A	N/A	N/A	33.4	33.4	33.4	47.0	26.3	dtpd
Dry Sludge Solid Content	92%	92%	92%	N/A	N/A	N/A	92%	92%	92%	92%	92%	
Dryer Operation Hours	5,716	7,488	3,765	N/A	N/A	N/A	6,756	7,488	7,488	5,508	7,488	hrs/yr
Dryer Feed Rate	3,363	2,567	3,363	N/A	N/A	N/A	3,608	3,256	3,256	6,232	2,567	dry lb/hr
Dryer Evaporative Load	8,800	6,718	8,800	N/A	N/A	N/A	7,974	7,195	7,195	11,032	6,718	lb H_2O/hr
Dryer Heat Requirement	14.1	10.7	14.1	N/A	N/A	N/A	12.8	10.4	10.4	16.0	9.7	MMBtu/hr
Supplemental Fossil Fuel Requirement	3.5	2.7	4.2	N/A	N/A	N/A	3.2	0.6	8.3	16.0	4.2	MMBtu/hr
Annual Fuel Oil Requirement	145,808	145,808	115,739	N/A	N/A	N/A	156,161	32,279	448,903	638,498	229,835	gal/yr
Digester Gas Used for Digester / Dryer Heating	12.0	8.1	10.8	0.9	0.0	N/A	10.5	10.8	0.0	N/A	0.0	MMBtu/hr
Digester Gas to CHP	0.0	6.9	0.0	0.0	10.7	N/A	0.0	0.0	10.7	N/A	13.5	MMBtu/hr
CHP Electrical Production	N/A	763	N/A	N/A	1,196	N/A	N/A	N/A	1,196	N/A	1,506	kW
Average Digester Gas Flared	4.4	1.4	0.0	9.8	0.0	N/A	0.3	0.0	0.0	N/A	2.8	MMBtu/hr
Ferric Addition	0	0	234,365	234,365	234,365	686,565	0	0	0	0	0	gal/yr
Cake Production	0	0	16.1	33.4	33.4	47.0	0	0	0	0	0	dtpd
Cake Solid Content	N/A	N/A	35.0%	30.3%	30.3%	35.0%	N/A	N/A	N/A	N/A	N/A	
Annual Electrical Consumption	4,104	4,104	2,797	1,158	1,158	679	3,796	1,980	1,951	1,641	2,324	MW-hr/yr
Total Mass Hauled offsite	**28.6**	**28.6**	**64.7**	**110.1**	**110.1**	**134.4**	**36.3**	**36.3**	**36.3**	**51.1**	**28.6**	**wtpd**
Estimated Number of Trucks ($20yd^3$)	2.1	2.1	4.0	6.2	6.2	7.6	2.7	2.7	2.7	3.8	2.1	trucks per day
Average Solid Content	92.0%	92.0%	51.6%	30.3%	30.3%	35.0%	92.0%	92.0%	92.0%	92.0%	92.0%	
Average Volatile Content	64.3%	64.3%	71.8%	71.8%	71.8%	80.0%	71.8%	71.8%	71.8%	80.0%	64.3%	
Effective Heat of Combustion (Estimated)	7,400	7,400	4,300	2,100	2,100	3,100	8,500	8,500	8,500	9,600	7,400	Btu/lb
Number of Operators	5	5	5	4	5	4	5	5	5	5	5	
Days Per Week	5	7	5	5	5	5	6	6	7	6	7	days/week
Hours Per Year	10,400	14,560	10,400	8,320	10,400	8,320	12,480	12,480	14,560	12,480	14,560	hours/yr

4.0 ALTERNATIVE DRYERS

The SIWWTP currently contains an Andritz rotary drum dryer. The current dryer is designed to process digested sludge and requires high temperature heat in the direct fired arrangement (i.e. flue gas from combustion is sent directly into the drying drum). When evaluating alternative drying technologies, two key items were considered; the ability to process raw undigested primary sludge and the ability to utilize low temperature waste heat. When considering processing raw undigested primary sludge it was important to determine the ability and potential risks associated with the digestion capacity not being expanded. The ability to utilize low temperature waste heat is important to consider if a CHP system is incorporated in the future since lower temperature dryers can recover a portion of the waste heat from the CHP which can offset fossil fuel consumption and increase the overall efficiency (electrical + thermal) of the CHP system.

Four different dryer suppliers were contacted for budgetary pricing; Therma-Flite, Komline, Kruger, and Huber. Both Therma-Flite and Komline provide conduction style dryers that typically utilize thermal oil as the heat transfer medium. Kruger and Huber offer belt dryers that can operate at very low temperatures and are flexible with a variety of heat sources. Therma-Flite offers a dual screw conduction dryer (BioScru®) that uses a thermal oil loop at 475°-525° F to maintain the dryer temperature greater than 240° F. They have multiple installations in the industrial market but are fairly new to the municipal sludge market. Currently they have two full scale operating installations in North America with four more currently under construction. General product data and an installation list are provided in **Appendix C** and **Appendix D**. One of the new systems under construction in Canby, OR is designed to process primary sludge. The Canby, OR plant is expected to be brought online in the second quarter of 2012. Therma-Flite claims that their dryer can effectively handle undigested primary sludge and have pilot tested various types of sludge with their mobile unit. Therma-Flite claims that their patented dual, intermeshing helical rotors provides a self-cleaning system. When sizing for undigested primary sludge, Therma-Flite states that their dryer sizing will be larger do to the longer resident time requirements and the operating temperature requirements will be higher than for other sludge types.

Komline offers a paddle conduction dryer that uses a thermal oil loop at 350° – 400° F to maintain dryer temperatures greater than 200° F. Komline has more than 25 sludge dryer installations worldwide but most process digested or waste activated sludges. Komline stated that their dryer is not designed to process 100% undigested primary and declined to propose on Option 6. Komline did, however, offer a proposal for Option 5 and claims that their dryer can handle blends of digested and undigested sludge. As seen from the installation list provided in **Appendix D**, Komline has two installations that process undigested primary and waste activated sludge blends; Springfield, MA and Camden, NJ. More details on the Komline dryer are provided in **Appendix C**.

Kruger offers an indirectly fired dual belt dryer (BioCon®) that can operate with flexible fuel sources and heat transfer mediums. The heat for the drying process can be provided through air to air heat exchangers, thermal oil to air heat exchangers, steam to air heat exchangers or water to air heat exchangers. The process is typically separated into two temperature zones with the first zone operating at 300°-350° F and the second zone operating at 180°-250° F. The highest temperature in the dryer is at the point where solids are fed into the system and the temperature is progressively reduced as the solids dry. Kruger has more than 16 installations worldwide with five located in North America. None of the currently installed systems process

100% undigested primary sludge but two plants in North America process blends of chemically enhanced primary and biological aerated filter (BAF) sludges. More details on the Kruger dryer are provided in **Appendix C**.

Huber offers a dual belt dryer (Kult®) that is also flexible to operate with multiple energy sources such as fuel, exhaust heat, heat pumps or solar. The dryer can be designed to operate at very low temperatures to accommodate the desired fuel or heat source. Huber has close to 20 installations worldwide either in operation or under construction with one system currently under construction in North America. Huber did not provide any details about their experience with processing undigested primary sludge, however, more generic details on the Huber dryer are provided in **Appendix C**.

After evaluating costs, experience, and footprint requirements; the alternative dryer chosen as the basis in this evaluation was the Therma-Flite BioScru dryer. The BioScru dryer offered the lowest cost, a compact footprint and Therma-Flite claimed to have positive experience with processing undigested primary sludge. If a dryer replacement is chosen to process a blend on digested and undigested sludges, Komline could also be considered. The belt dryers offered by Kruger and Huber have the potential to utilize more low temperature waste heat from a CHP process than the conduction dryers offered by Therma-Flite and Komline, however belt dryers were eliminated from the evaluation since it is expected that the footprint requirements would exceed available space at the site. Both belt dryer suppliers recommended at least three dryer cabinets for full build out. The belt dryers were also found to be more expensive than the conduction style dryers.

5.0 LIFE CYCLE COST COMPARISON AND DISCUSSION

Capital and operating cost for the options presented in **Section 2.0** were developed and a 20-year life-cycle cost analysis (LCCA) was performed. The results of the 20-year Present Worth LCCA are presented below in **Figure 5-1**, **Figure 5-2**, and **Table 5-1**. A detailed breakdown of the capital cost and LCCA estimates are provided in **Appendix B**.

Figure 5-1. 20-Year LCC Summary

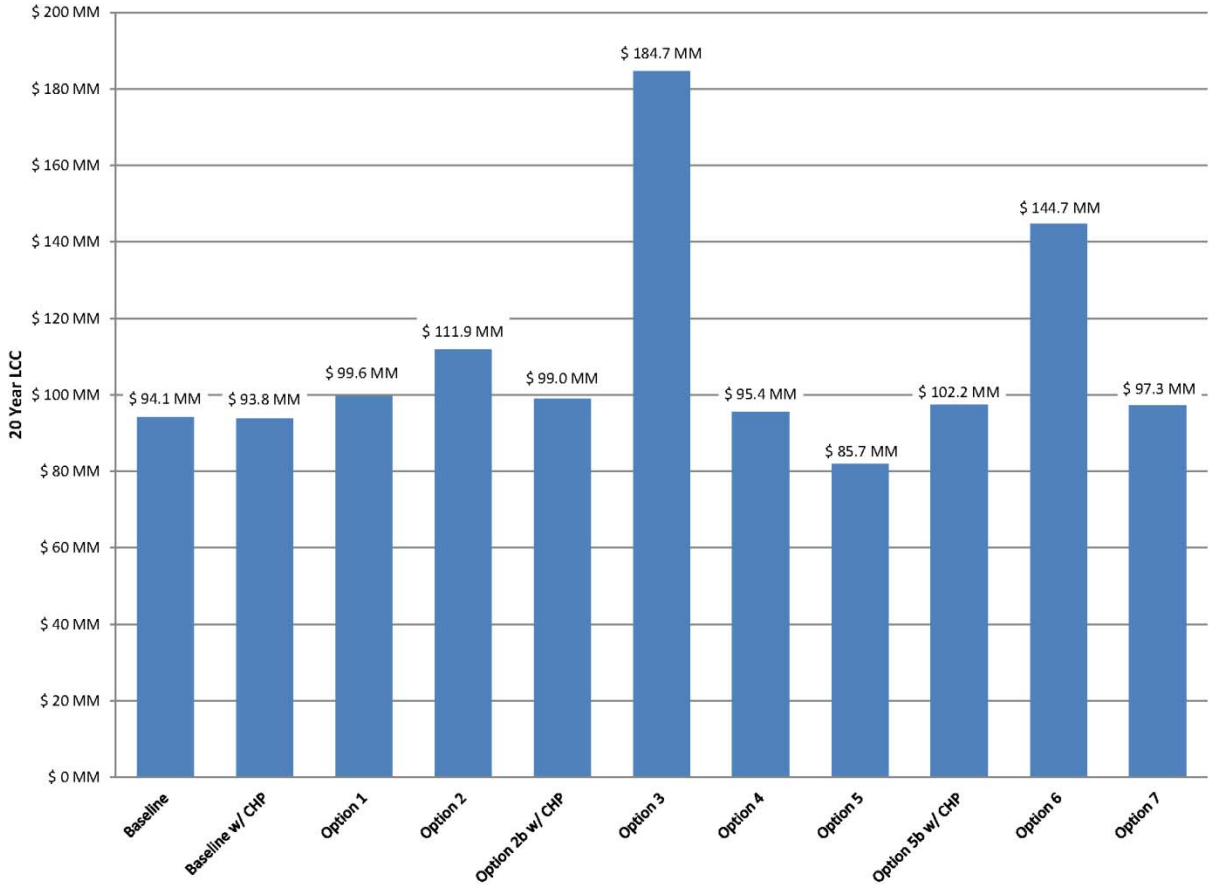

Table 5-1. 20-Year LCC Break Down

20 Yr LCC Costs											
	Baseline	Baseline w/ CHP	Option 1	Option 2	Option 2b w/ CHP	Option 3	Option 4	Option 5	Option 5b w/ CHP	Option 6	Option 7
Capital[1]	$ 25.7 MM	$ 34.2 MM	$ 8.7 MM	$ 8.7 MM	$ 22.1 MM	$ 11.2 MM	$ 9.0 MM	$ 17.0 MM	$ 30.4 MM	$ 22.4 MM	$ 53.0 MM
Electricity	$ 15.8 MM	$ 15.8 MM	$ 11.9 MM	$ 4.7 MM	$ 4.7 MM	$ 2.5 MM	$ 14.1 MM	$ 7.6 MM	$ 8.3 MM	$ 6.1 MM	$ 9.8 MM
Polymer	$ 0.8 MM	$ 0.8 MM	$ 0.9 MM	$ 0.9 MM	$ 0.9 MM	$ 1.4 MM	$ 0.9 MM	$ 0.9 MM	$ 0.9 MM	$ 1.4 MM	$ 0.8 MM
Lime	$ 0.0 MM	$ 0.0 MM	$ 0.0 MM	$ 0.0 MM	$ 0.0 MM	$ 0.0 MM	$ 0.0 MM	$ 0.0 MM	$ 0.0 MM	$ 0.0 MM	$ 0.0 MM
Ferric Chloride	$ 0.0 MM	$ 0.0 MM	$ 14.5 MM	$ 14.5 MM	$ 14.5 MM	$ 70.5 MM	$ 0.0 MM	$ 0.0 MM	$ 0.0 MM	$ 0.0 MM	$ 0.0 MM
No.2 Fuel Oil	$ 12.1 MM	$ 11.1 MM	$ 10.7 MM	$ 0.0 MM	$ 0.0 MM	$ 0.0 MM	$ 11.6 MM	$ 2.4 MM	$ 31.3 MM	$ 48.8 MM	$ 21.3 MM
Cake Tipping Fee	$ 0.0 MM	$ 0.0 MM	$ 11.5 MM	$ 43.9 MM	$ 43.9 MM	$ 56.1 MM	$ 0.0 MM	$ 0.0 MM	$ 0.0 MM	$ 0.0 MM	$ 0.0 MM
Dry Product Tipping Fee	$ 0.0 MM	$ 0.0 MM	$ 0.0 MM	$ 0.0 MM	$ 0.0 MM	$ 0.0 MM	$ 13.9 MM	$ 13.9 MM	$ 13.9 MM	$ 21.3 MM	$ 0.0 MM
Transportation Costs	**$ 6.6 MM**	**$ 6.6 MM**	**$ 10.3 MM**	**$ 16.5 MM**	**$ 16.5 MM**	**$ 22.5 MM**	**$ 10.0 MM**	**$ 10.0 MM**	**$ 10.0 MM**	**$ 12.6 MM**	**$ 6.6 MM**
H-Power Electricity Credit	$0.0	$0.0	$0.0	$0.0	$0.0	$0.0	$0.0	$0.0	$0.0	$0.0	$0.0
CHP Electricity Credit	$0.0	($21.7) MM	$0.0	$0.0	($37.8) MM	$0.0	$0.0	$0.0	($37.8) MM	$0.0	($42.8) MM
CHP Gas Cleaning Cost	$0.0	$0.6 MM	$0.0	$0.0	$1.1 MM	$0.0	$0.0	$0.0	$1.1 MM	$0.0	$1.2 MM
Labor	$ 24.0 MM	$ 33.6 MM	$ 24.0 MM	$ 19.2 MM	$ 24.0 MM	$ 19.2 MM	$ 28.8 MM	$ 28.8 MM	$ 33.6 MM	$ 28.8 MM	$ 33.6 MM
Maintenance	$ 9.0 MM	$ 12.6 MM	$ 7.0 MM	$ 3.5 MM	$ 9.1 MM	$ 1.2 MM	$ 7.1 MM	$ 4.9 MM	$ 10.6 MM	$ 3.3 MM	$ 13.8 MM
Total Operating	$ 68.4 MM	$ 59.6 MM	$ 90.9 MM	$ 103.2 MM	$ 76.9 MM	$ 173.5 MM	$ 86.5 MM	$ 68.6 MM	$ 71.8 MM	$ 122.4 MM	$ 44.3 MM
Total 20 Year LCC	**$ 94.1 MM**	**$ 93.8 MM**	**$ 99.6 MM**	**$ 111.9 MM**	**$ 99.0 MM**	**$ 184.7 MM**	**$ 95.4 MM**	**$ 85.7 MM**	**$ 102.2 MM**	**$ 144.7 MM**	**$ 97.3 MM**

[1] Based on February, 2011 costs $ENR_{20\ Cities}$ Index = 9,000

Figure 5-2. 20-Year LCC Break Down

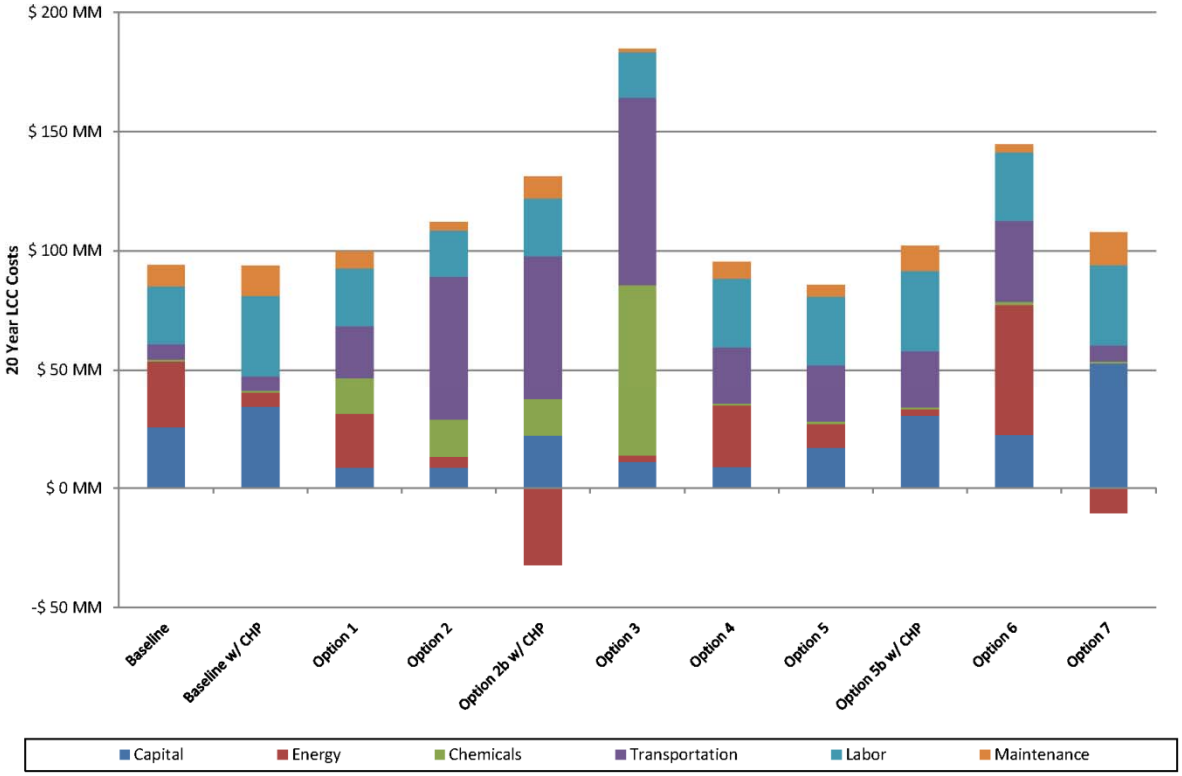

The results of the analysis indicate that the options without digestion (Options 3 and 6) and the options that involved transporting only cake solids (Options 2 and 3) are the most expensive based on a 20-year LCCA and do not warrant further consideration. The high cost associated with Option 6 is due to the high consumption of No. 2 fuel oil while the high cost associated with Options 2 and 3 are due to the high transportation costs and tipping fees at H-Power. The remaining options are all within a +/- 10% range of the baseline 20 year life cycle cost (LCC) so further consideration is warranted for the planning period based on LCCA. Of the remaining options presented for consideration, Option 1, which involves hauling the excess cake that cannot be processed through the existing digester to H-Power, provides the lowest capital cost but has the highest annual operation cost. Option 7, which involves building a second digester, adding CHP and replacing the existing dryer with one that can operate utilizing CHP waste heat, has the highest capital cost but provides the lowest annual operating cost.

It should be noted that the analysis does not include any credit for generating power from processing the residuals and biosolids at H-Power. It is understood that the specific details of this would need to be determined through an agreement with the H-Power operator. Incorporating an electrical credit from H-Power into the LCCA would alter the results presented herein. It should also be noted that for the LCC costs, it is assumed that any digested and dried biosolids would continue to be marketed for land application without generating revenue. This applies to the dried biosolids produced in the baseline scenario, Option 1 and Option 7. The residuals and biosolids produced in the remaining options were assumed to be hauled to H-Power for incineration and power generation.

When considering H-Power as an alternative location to dispose residuals and biosolids from SIWWTP, the available throughput capacity at H-Power should be considered. Based on discussions with H-Power, the maximum additional throughput capacity for processing sludge is 90 wet tons per day (or 32,850 wet tons per year). When considering this constraint, it can be seen from **Figure 5-3**, that options 2 and 3 will not be sustainable over the long term unless extra capacity to accept sludge or biosolids is added at H-Power. The capacity limitation, along with the higher 20-year LCCA costs associated with these options reinforces that elimination of drying at SIWWTP is not viable when considering sludge disposal at H-Power. If a portion of undigested dewatered cake is hauled to H-Power (Option 1) it is also important to consider sludge quantities from the other plants on the Island (such as Honouliuli and Kailua) that may also transport their sludge to H-Power. When looking at the sludge loadings from an Island-wide perspective, the mass throughput capacity at H-Power could end up being a limitation for long term sustainability associated with Option 1.

Figure 5-3. Total Sludge Production Estimate and Current Conditions at H-Power

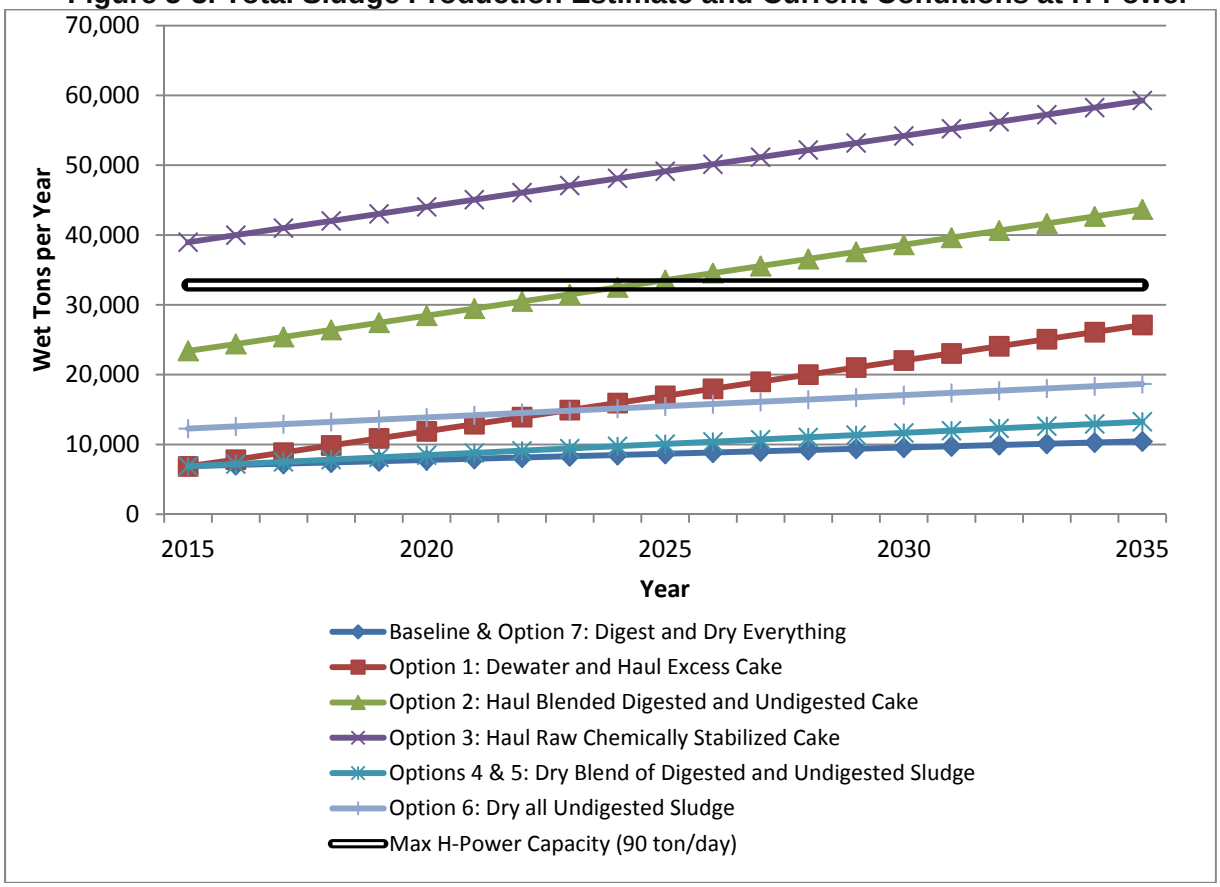

Furthermore, H-Power recently confirmed with the city that they would not accept raw undigested cake except for emergency situations. As such Options 1, 2 and 3 would likely only be viable modes of operation under emergency type conditions.

5.1 Comparison to Current Operating Costs

After the LCC costs were compiled, the operating costs were provided and reviewed to compare the results with the actual numbers. Based on the records for FY-2011, the operating costs associated with the current Synagro contract were $4,300,000 but approximately $400,000 of

the costs were associated with various capital improvements and other reimbursable costs that were not accounted for in the LCC. By deducting these additional reimbursable costs, the total operating cost equals about $3,900,000 per year or $360/DT. By comparison, the operating cost in the LCC for the baseline option at year 2015 was estimated to be $3,050,000 or $260/DT which is within 30% of the actual cost for year 2011 so the costs were considered reasonable for a planning level estimate.

It should be noted that additional costs associated with a 3rd party operating contractor such as Synagro would be expected to increase the costs some based on the fees, overhead and profit associated with those contracts. The contractual fees and charges, however, would change with changes in process and equipment and these additional costs are not directly captured in this analysis, however, it is expected that the associated increase would be proportional to each option so the costs presented still provide a reasonable comparison between the different options for planning level purposes.

6.0 NON-MONETARY CONSIDERATIONS

6.1 Past 2035 Sizing and Land Issues

The options presented herein are based on the 20 year planning period before secondary treatment will be brought online. After secondary treatment is brought online, the sludge load is anticipated to increase almost 70 percent as indicated by **Table 1-1**. Thus additional processing capacity will be required for Sand Island. The processing capacity can be added by expanding the chosen solids handling alternative such as building additional digester capacity to account for the increased sludge production. A separate secondary sludge processing alternative can also be considered. The future secondary production could be processed separately or as a blend with digested primary sludge depending upon the ultimate disposal/disposition of solids. Future options considering incineration, gasification or pyrolysis could also be warranted and technologies that are currently considered innovative, such as gasification and pyrolysis, may be more developed in the future. A future Thermal Hydrolysis option may also be worth considering which could significantly increase the digestion capacity at SIWWTP while minimizing the additional digester volume required.

Currently there is not a lot of available excess space at SIWWTP and the available land will be a premium when the secondary treatment expansion is required. Thus future options for both the secondary treatment and solids handling will need to be compact systems if located onsite. If room for a full solids handling facility is not available, it may be necessary to export solids to a future solids handling facility at another WWTP or third party site that can operate as a regional facility.

The existing dryer at SIWWTP is still fairly new and should have many more years of available service life and since the projected savings anticipated with replacing the dryer does not yet pay back the additional capital it may be considered to add a low temperature dryer in the future when the existing dryer is near the end of its useful service life or when the existing dryer's capacity requires expansion. The service life of the centrifuges and digester equipment will also have to be considered and a full overhaul or equipment replacement may be necessary once secondary treatment is brought online.

6.2 Unknown and Unaccounted for Costs

It should be noted that the life cycle costs presented in this report do not directly account for costs associated with existing contractor agreements for operation or disposal. The life cycle estimate also does not account for any credit associated with power that is produced at H-Power from combusting the residuals and sludge.

The capital costs as presented herein accounts for the equipment associated with chemical addition for all options but only incorporates the operating and chemical costs for the scenarios where undigested cake is transported offsite (Options 1 through 3).

6.3 Operations, Maintenance and Manpower Impacts

6.3.1 Operational Complexity

The options presented in this report have varying levels of complexity and would have different manpower requirements for operation and maintenance. Anaerobic digestion in general is a well proven and relatively easy to operate process when stable operation is maintained. Thermal drying, however, can be more complex and may require greater attention from operation staff than digestion. Most drying system, however, are very well automated to make

monitoring and adjustments easier but dryers are dynamic systems that operate at relatively high temperatures so proper operation is essential to ensure safety and preserve the life of the equipment.

The options which account for operating separate processes such as Options 1 and 2 will inherently be more complex because operation and maintenance of two separate systems are required. Also the operation and control of the split between the two processes will require updated controls and careful monitoring.

6.3.2 Handling and Hauling Considerations

The quality and characteristics of the final residuals and biosolids product that is produced will have a significant impact on the handling and hauling considerations. If cake is transported, there will be an increased number of trucks required, increased staff to handle hauling and increased truck traffic when compared to hauling dried pellets. Adding lime, ferric chloride or other chemicals to either stabilize the residuals or control odors can further increase the amount of sludge being hauled. Even with chemical treatment, the impact of odors will need to be carefully considered as to avoid odor complaints from neighbors and the surrounding community.

Incorporating full digestion to generate Class B biosolids typically reduces odors and allows for easier handling of sludge. Digestion also reduces the mass of sludge thus reducing the number of trips and trucks required. Undigested chemically stabilized sludge, however, typically have higher odors and if dewatered or mixed with other chemicals to high solid contents, they may become very difficult to pump and could cause handling issues if the pumps, conveyors or transport equipment are not properly selected.

Drying of the sludge will provide significant mass reduction and can help minimize the number of trips, truck and drivers required. Dried biosolids, however, can be dusty and can be subject to self-heating and self-ignition. The self-heating risk may be increased if the dried sludge is not fully stabilized in the digesters or if the solids become rewetted.

6.3.3 Reliability and Redundancy of Operation

The selection of the final option needs to take into account redundancy and back-up disposition options to account for equipment failures and loss of an available outlet(s). Adding a second digester will provide redundancy and increase reliability of the existing process and also provide the most flexibility with disposition, which was foregone at the outset of project implementation perhaps for economic reasons. The various outlets for disposition are outlined in the generic process flow diagrams (**Figure 3-2** through **Figure 3-8**). As can be seen from these figures, options that include both digestion and drying allow for marketing of a Class A product as well as back-up disposition of cake to H-Power or landfill. If drying is taken offline, the only options for disposition are H-Power, landfill and possibly offsite composting If sludge is not digested, there are still questions regarding the ability of H-Power or an offsite composting facility to take undigested primary sludge and the marketability of dried undigested primary sludge as a Class A product.

Further long term planning should consider additional disposition options via thermal processes such as incineration, gasification or pyrolysis. The addition of a thermal processing option could be located either at the Sand Island site or offsite at another WWTP or third party facility that is owned and controlled by CCH. Having a thermal processing site specific for residuals and

biosolids processing would ensure the availability of the outlet option and could potentially provide a means to generate green energy in the form of electricity or heat. Maintaining a diverse sludge management portfolio that allows for multiple disposal options such as land application, thermal processing, or landfill disposition will provide the greatest flexibility to deal with market fluctuations and equipment outages.

6.3.4 Potential Failure Modes and Consequences

When considering future processing alternatives, the potential failure modes and back-up operation has to be considered. Either redundancy in equipment or a back-up processing and disposition method will have to be accounted for.

For options that incorporate adding a second digester (Baseline and Option 7), additional reliability is added into the system in terms of the digester capacity. The second digester also provides redundancy in case one digester is taken offline for cleaning or maintenance. A back up chemical treatment system will also be incorporated for emergency if only one digester was online and the sludge production exceeded digester capacity.

For options that do not include a second digester, a back-up chemical treatment system is required in order for the sludge to be transported to either H-Power or landfill. If the undigested sludge is dried, then chemical treatment is not required for the dried pellets but chemical treatment would be utilized as a back-up when the dryer is offline.

For options where chemical treatment is normally practiced, the redundancy will be required in the chemical treatment equipment. The design processing capacity must be achievable with one unit out of service.

For all options considered redundancy is incorporated into the dewatering system so the plant can continue to dewater all residuals and sludge with one unit out of service.

All processes that are being considered in this analysis consist of fairly standard components and do not contain specialty parts which exceptionally long lead times. Thus spare parts required for maintenance should be able to be obtained fairly quickly; however, additional time associated with transport from the mainland may increase the lead time of some components.

6.4 Comparison to Typical Industry Practice

Utilizing anaerobic digestion for residuals stabilization is one of the most common sludge processing technologies practiced in the industry. For plants of Sand Island's size, it is standard practice to incorporate redundant digester capacity and typically, it is desired to be able to maintain greater than 15 day sludge retention time (SRT) (which is required for Class B) with the largest digester out of service at design loading conditions.

Utilizing chemical stabilization through a lime mixing system is another very commonly practiced technology for residuals stabilization. A lime stabilization process can be designed to produce either Class A or Class B biosolids.

Ferric Chloride is a chemical additive that is commonly used in the industry for various reasons. One use is to help control odors in sludge processing. Although the use of ferric may help reduce odors associated with the sludge, it is not considered a stabilization process and cannot be used to produce Class A or Class B biosolids.

Thermal drying of sewage sludge is also fairly common in the industry; however, there are less installations when compared to anaerobic digestion or lime stabilization. Most plants that incorporate dryers, process either digested sludge or waste activated sludge. There are currently no operating installations that process 100% raw primary sludge and only a handful of sites that dried blends of raw primary and secondary solids were identified. The sites that process blends of undigested primary and waste activated sludge blends appear to have mixed results in terms of operational reliability. There were no sites identified that dried blends of raw and digested primary sludge.

6.5 Potential Regulatory Issues

The baseline option, options 4, 5 and 7 can be utilized as processes to generate Class B and/or Class A biosolids based on EPA 503 regulations. The digested portions of options 1 and 2 will also meet Class B or Class A (if dried) biosolids. Although the product may be suitable according to regulatory standards, a market has to be established for land application to be a viable disposition alternative. The undigested chemically treated sludge produced from options 1, 2 and 3 do not meet the requirements for Class A or Class B biosolids.

Recycle liquid streams that are returned upstream back to the primary clarifiers can be relatively high strength and could increase the load on the primary clarifiers which could ultimately impact the plants effluent limits. Further testing of the dewatering and drying condenser's recycle stream would be required before the impact could be fully accessed.

Incinerating residuals and sludge offsite at H-Power will likely impact that facilities air permit and regulatory and permitting compliance will need to be confirmed. The details associated with the air permitting of the offsite combustion facility, however, are beyond the scope of this report.

The facilities air permit would also be impacted in the sub-options that include adding CHP to the facility. The impact would require a site specific evaluation of specific CHP technologies. The details of the air permitting regulations are beyond the scope of this report.

6.6 Outlet or Market Long-Term Viability

6.6.1 H-Power Operating Requirements

The maximum capacity of the H-Power facility has been indicated at a total of 90 total tons per day of cake material (+/-28% solids) under present conditions. It is intended for this material to be received at a dedicated receiving area with odor control, with the material being pumped via positive displacement pumps directly into the furnace through a dedicated nozzle. The current system design is based on processing digested sludge cake. There are concerns regarding the receipt and handling of undigested primary sludge cake. The odors and other related issues associated with undigested sludge cake are undesirable when dealing with the material at H-Power. As such the receipt of undigested sludge will not be accepted at H-Power unless under emergency conditions and should not be planned as a long term outlet. There are also concerns regarding potential corrosion and ability to convey the material using positive displacement pumps if the material is chemically treated.

In discussions of receiving and incinerating dried material (>90% solids concentration) there are concerns related to the high heat value of the material being added to a typical municipal solid waste (MSW) incinerator. There was also a concern raised over the storing of large amounts of dry material and the potential for the material to self-ignite. Regarding the receipt of the dry

material there is also not a well-defined area to receive the material at H-Power as there are concerns that if the material becomes wet it will be odorous and difficult to handle with their current equipment.

6.6.2 Market Suitability of Dried Fertilizer Material

As shown in **Table 1-4**, during the 2010-2011 fiscal year approximately 85% of the dried pellets were beneficially reused for land application and approximately 76% of the total sludge production was beneficially reused for land application. The market for the product distribution as a fertilizer material is being developed and the available outlets for the product has increased over time, however, no revenue is currently being generated. With limited land available on the island, it is anticipated that there will ultimately be a cap on the amount of dried fertilizer that can be successfully distributed thus alternative disposition or beneficially reuse routes should be investigated. It has also been reported that the final product can be odorous especially if rewetted.

For options that include drying undigested primary or blends of digested and undigested primary sludge, the marketability of the final product as a fertilizer material may be impacted. For options with blends of digested and undigested primary, the addition of raw primary will likely increase odors and reduce stability of the final product but it is unknown exactly how to judge the full impact as the primary fraction increases. For options which include drying 100% raw primary, it would likely be difficult to market the final product do to odor and stability.

For options that consider replacing the dryer, the final product may be more granular and may not be as aesthetically pleasing as the uniform product currently produced. Although the product may not be considered as high of a quality, the granular material can still be successfully marketed and there are several installations on the mainland where this is successfully practiced.

6.6.3 Cake Product Outlets

If drying is not incorporated the only outlets on the island are H-Power, landfill, or offsite composting. The ability to send raw or chemically stabilized cake to these outlets long term is questionable at best. The dewatered cake loading rate to H-Power is expected to exceed H-Power's capacity sometime in the planning period and H-Power has stated that they will only accept chemically treated cake on an emergency basis only. The landfills acceptance of sewage sludge cake is also unknown and it is anticipated that significant restrictions may be imposed in the future. Sending sludge to an offsite composting facility may also be a possibility but digestion may be required due to odors.

6.6.4 Rising Cost of Energy and Waste to Energy Opportunities

Due to the limited area available for land application, anticipated future restrictions on landfill disposal and the high energy costs on the island, future project planning shall consider technologies geared towards minimizing solids production and utilizing the energy potential of the residuals and biosolids. Technologies that warrant future consideration include recovering energy from the digester biogas via CHP technologies and technologies that tap into the energy potential of the dried biosolids such as combustion, gasification and pyrolysis. The island-wide study that is currently ongoing will consider the impact of these energy generating technologies as it may be found that utilizing the dried solids as a fuel source may be more cost effective then

beneficial use as a fertilizer product. Energy production evaluations must consider both thermal and electrical energy as both are important aspects to consider for future planning. For example the syngas produced from a gasification process, can be used as the energy source to dry the sludge or to produce electricity. The gasification and pyrolysis technologies, however are still in the early phases of development and are not yet well established in the WWTP industry.

A summary and comparison of some of the non-economic factors is shown below in **Table 6-1**. There are non-quantifiable aspects that need to be considered in the decision but since they are policy-related, CCH should carefully consider the attached table in order to incorporate aspects such as reliability and risk in addition to cost and timing in its decision making.

Table 6-1. Non-Economic Factors

Option	Process Risk	Back-up Processes	Operational Complexity	Comparison to Typical Industry Practice	Dryer Manufacturer Acceptability	H-Power Acceptability[1]
Baseline	Low - well proven	Second Digester and Chemical Treatment	Medium	Commonly used	Accepted by existing dryer manufacturer	Acceptable as dry pellets or digested cake
Baseline (with CHP)	Low - well proven	Second Digester and Chemical Treatment	Medium	Commonly used	Accepted by existing dryer manufacturer	Acceptable as dry pellets or digested cake
Option 1	Low - well proven	Chemical Treatment	Medium to High	Both processes commonly used	Accepted by existing dryer manufacturer	Not acceptable as undigested cake
Option 2	Low - well proven	Chemical Treatment	Low to Medium	Both processes commonly used	No Drying	Not acceptable as undigested cake
Option 2b (with CHP)	Low - well proven	Chemical Treatment	Medium	Both processes commonly used	No Drying	Not acceptable as undigested cake
Option 3	Low - well proven	Chemical Treatment	Low	Commonly used	No Drying	Not acceptable as undigested cake
Option 4	High - against vendor recommendation	Chemical Treatment	Medium	Uncommon	Discouraged by existing dryer manufacturer	Acceptable as dry pellets or digested cake
Option 5	Medium - limited successful applications	Chemical Treatment	Medium	Uncommon	Accepted by multiple manufacturers	Acceptable as dry pellets or digested cake
Option 5b (with CHP)	Medium - limited successful applications	Chemical Treatment	Medium	Uncommon	Accepted by multiple manufacturers	Acceptable as dry pellets or digested cake
Option 6	High - No reference sites	Chemical Treatment and Dryer	Medium	Uncommon	Discouraged by several manufacturers	Acceptable as dry pellets or digested cake
Option 7 (with CHP)	Low - well proven	Second Digester and Chemical Treatment	Medium	Commonly used	Accepted by multiple manufacturers	Acceptable as dry pellets or digested cake

[1] H-Power would consider the acceptance of undigested cake on an emergency short term basis only.

6.7 Implementation Schedule

Preliminary implementation milestones for the Baseline following a notice to proceed (NTP) are:

- Complete Design: 6 Months from NTP
- Obtain EA/SMA/Permits: 8 Months from NTP
- Procurement and Award: 4 Months from Permit Approval
- Construction Complete: 30 Months from Award
- Total Estimated Duration: 42 Months (3.5 Years)

The engineering, permitting, procurement and equipment supply for all options would have a similar duration to the Baseline. The construction of the digester is somewhat of a specialty and may take slightly longer than installation of equipment such as an alternate dryer or centrifuge. However, the above timeline should be used for planning purposes regarding any of the evaluated options.

It should be noted that the time needed for the front end of the procurement process, prior to the NTP, may vary considerably depending on whether an existing contract is amended or a new procurement process is started. The difference in the two processes varies but can potentially be significant, perhaps up to a full year difference in the time required.

For options that incorporate CHP it is anticipated that this work would be initiated separately or at a later date so as not to interfere with the critical path for construction of sludge processing improvements. CHP would be installed for energy and cost saving measures and would not directly impact performance of the sludge processing system. However, there may be permitting aspects (specifically air quality) of the CHP system that require additional time prior to start of construction.

7.0 CONCLUSIONS AND RECOMMENDATION

The 20 year life cycle cost estimates for the Baseline Options and Options 1, 2b, 4, 5, 5b and 7 are all within approximately 10% of each other. With the accuracy of cost estimation available for this level of planning purposes it is possible that the actual ranking may vary with detailed planning, design, construction and implementation. There are specific limitations that were identified for some of these options

- Options 2b - The H-Power operator has indicated to CCH that undigested sludge product (Options 2b) would not be an acceptable product other than on a short term emergency basis.
- Option 4 – The existing dryer manufacturer highly discourages the drying of blended sludge (Option 4) and may not warranty operation of their equipment in such a manner.
- Option 5 – The 20 year life cycle cost is similar to that for implementing the Baseline Option with CHP. However, the lack of a second digester reduces the overall process reliability when compared to the Baseline Options and would require disposal of large amounts of undigested cake during maintenance or repair of the existing digester.
- Option 7 – The overall cost and process reliability is similar to that of the Baseline Option. However, the dry product will not have the same uniformity characteristics as the existing pellets and may reduce marketability as a fertilizer product.

Based on the above, the Baseline Option and Option 7 have the highest level of process reliability, while meeting the requirements of the dryer manufacturer (Andritz) and acceptability by the H-Power operator (Covanta). Options 1 or 2 may be accepted by H-Power on emergency or short term interim basis dependent on quality and quantity of material.

7.1 Thermal Processing Other Than H-Power

Although not directly addressed as part of this report, there is the potential for CCH to develop a standalone receiving and thermal processing facility for residuals and biosolids. Such a facility could be at one of the existing WWTP sites or at a separate location with the ability to receive cake or dry material that could be processed through incineration, gasification or pyrolysis. Such a facility would have to be evaluated in comparison to current operating agreements with Synagro contracted costs, tipping fees at H-Power and other available outlets. However, the advantage to such a facility is it would allow CCH to have positive control of a dedicated outlet and would provide the opportunity to directly recover energy in the form of either electricity or waste heat.

7.2 Impacts of Existing Contractual Agreements

CCH will need to investigate potential cost adjustments associated with current contractual arrangements with Synagro, Covanta (H-Power operator), Hawaiian Earth Recycling (HER) and other potential private outlets that may be affected during implementation. LCCA analyses presented in this report are based on typical operating costs associated with the representative processing technologies and anticipated tipping fees at H-Power for receipt of material. The cost of canceling or altering these contractual arrangements could have an impact on both near term capital costs as well as future contract charges and fees. The cost of cancelling or modifying existing contracts is unlikely to alter the LCCA rankings of the Options since any of the Options could be operated by a private third party operator and the cost of canceling/modifying a contract is relatively minor (<2%) in relation to the overall LCCA.

7.3 Recommendation

There are several key issues that are driving the future for sludge processing and disposal locally:

- The changing demographics of the island land use away from agricultural activities toward residential and tourism could eventually limit the future market of land application for soil amendment and fertilizer purposes. The currently available and planned facilities that CCH intends to use for creation of fertilizer and compost product should be adequate to meet future market demands. The current pelletized fertilizer product produced by Synagro is currently supplied to users at no charge and the market demand for such product does not appear to have a strong future growth opportunity. The demographic of residential and tourism typically prefer other soil amendment products that do not use wastewater biosolids and often require significant engagement to prove that it has equivalent aspects to other market products.
- There is a relatively high cost of both fossil fuels and electrical power locally and a national trend for energy costs to continue to grow at a greater pace than inflation. Due to the rising cost of power and recent technology developments, the implementation of waste to energy and energy reduction improvements at wastewater and solids handling facilities is growing rapidly. These technologies typically consist of combined heat and power cogeneration using combustible biogas gas from anaerobic digesters as well as thermal oxidation of solids, which also greatly reduces the amount of waste material for disposal.
- Due to the limitation of available land there is a strong desire locally to limit or eliminate the amount of material that is required for disposal at a landfill. A goal for CCH is the elimination of landfilling of materials other than ash in the near future. The ongoing operation and expansion of the H-Power waste to energy facility plays a key role in this by greatly reducing the amount of material that is land filled while generating electricity from the municipal solid waste it receives.
- There are existing and established sludge processing assets in place at the three largest WWTPs. Many of these assets are relatively new and provide a consistent and reliable treatment process. Consideration of the potential operational benefits and capital investment already in place will be part of any future planning considerations.

Based on these key issues and available opportunity it is recommended that CCH pursue a long term strategy for the processing and disposal of sludge that focuses on cost effective recovery of energy and minimization of sludge solids through generation of an ash product by thermal oxidation. Additionally, CCH should retain the ability to have multiple processing and outlet sources available in the future to ensure continued and reliable service in the event of the unforeseen. Any changes to in plant processing or end use/disposal should be focused on establishing an overall level of risk and reliability that is equal to or better than current operations.

Available industry established technologies and strategies that either recover energy and/or reduce waste include:

- Anaerobic digestion reduces the volatile solids portion of sludge and creates a combustible biogas The biogas can be used to generate both heat energy for use in treatment processes and electrical energy that can be using in the plant or returned to the power grid. The digested end product is reduced in mass but would require subsequent thermal oxidation to convert to an ash product.

- Digested, undigested or blended sludge can be dewatered to create a cake product with approximately +/-30 percent solids concentration and thermally oxidized either onsite or off site. This material would burn autogenously (energy to remove water equals energy recovery from solids) generating no additional energy other than what is required to reduce the material to ash. It should be noted that digestion reduces the thermal energy available and would require a dryer cake product to burn autogenously, however, it reduces the incinerator mass throughput so the equipment sizing can be reduced.
- Digested, undigested or blended sludge can be dewatered and then dried to create a solid product with approximately +90 percent solids concentration and thermally oxidized either onsite or off site. This incinerated material has a high thermal value and may be capable of generating both heat and electrical energy while reduce the material to ash. As with incineration of cake material, digestion reduces the thermal energy available. Additionally there is heat energy required for drying of the material from the +/-30 percent solids to the +90 percent solids that would need to be taken into consideration of net energy benefit.

This strategy of waste minimization and energy recovery is aligned with that for municipal solids waste and there may be opportunities for pursuit of solutions that are mutually beneficial to both. The H-power facility is one potential outlet opportunity and should be fully pursued and developed along with other available outlets. H-Power is an operating and permitted facility that is currently planned to have the capability to receive 90 tons per day of +/-30 percent solids sludge cake material. It is unknown if or how much +90 percent dry sludge material H-Power could receive but this would represent a significant opportunity for energy recovery and waste reduction. It is recommended that this issue be fully investigated prior to making any long term decisions regarding sludge handling operations at any of the WWTPs.

CCH is currently engaged in an Island-wide Biosolids Master Plan, which will outline future needs and solutions for all nine CCH WWTPs in an integrated manner. Maintaining a diverse sludge management portfolio that allows for multiple disposal options such as land application, thermal processing (such as H-Power), or landfill disposition will provide the greatest flexibility to deal with market fluctuations and equipment outages.

With regards the current sludge processing facilities at SIWWTP the determination of modifications to the existing operation should be based on the final determination of the type and amount of material that can be received at H-Power. Additional considerations include the determination of cost effectiveness related to digestion and beneficial use of biogas to either generate electricity and/or provide thermal energy for drying and process operations. When comparing capital costs consideration should be given to providing adequate redundant process equipment and/or back-up processes. If a second digester is not installed then a sufficient number of centrifuges and chemical treatment system should be installed sufficient to dewater and handle the undigested sludge flow. Additionally it should be ensured that a disposal outlet is capable of receiving undigested, chemically treated sludge in the quantity anticipated if the existing digester is out of service.

Based on the key aspects discussed, the life cycle cost comparison and keeping potential risk at or below current conditions it is recommended that a second digester be pursued to that can maintain process reliability with a range of outlet opportunities. Furthermore the options available for incineration of cake and/or dried sludge at H-Power should be further evaluated and developed to provide opportunities for SIWWTP as well as the other eight CCH WWTPs. Final determination of a long term outlet for the digested sludge from SIWWTP should be part of

the Island-wide Biosolids Master Plan, which will consider the opportunities as H-Power and other potential outlets.

Appendices

Appendix A – Background Assumptions

Mass Balance Assumptions

The assumptions used in the mass balance and economic calculations are listed below:

- The raw volatile content in the sludge is 80%
- Digester Assumptions
- The maximum loading to digester is 11,900 dry ton per year or 32.6 dtpd[3]
- The digester averages 55% volatile solids reduction (VSR)
- Average digester gas production equals to 15 ft^3 per lb of VS destroyed
- Average digester gas heat value equals to 600 Btu/ft^3
- Dewatering Assumptions
- Raw Undigested Sludge = 30% D.S
- Digested Sludge = 27% D.S.
- Dewatering Capture Rate = 95%
- Polymer Consumption for Dewatering
- Raw Undigested Sludge = 4 lbs per dry ton
- Digested Sludge = 4 lbs per dry ton[4]
- Supplemental fuel for dryer is Number 2 Fuel Oil (HHV = 138,000 Btu/gal)
- The maximum amount of digester gas that can be consumed in the existing dryer is equal to 75% of the total fuel consumption[5]
- Maximum excess mass throughput through H-Power is 90 tons per day

Equipment Assumptions

The plant currently contains the following existing equipment and assumptions used in the analysis are listed below.

- The plant currently contains two (2) Andritz D5LL centrifuges[6]
- Solids Loading Rate = 3,000 lb TSS / hr / unit
- Hydraulic Loading Rate = 180 gpm / unit
- Motor Load = 100 Hp
- Assumed Power Factor = 0.331 kW/gpm
- Assumed a 2 Hp polymer feed system was used
- Assumed Polymer Power Factor = 0.006 kW/gpm (sludge)
- The plant currently contains one (1) Andritz DDS 40 dryer[7]
- Evaporative Load = 8,800 lbs H_2O / hr
- Approximate cost = $8 MM
- Assumed Fuel Requirement = 1600 Btu / lb H_2O evaporated
- Assumed Power factor = 0.049 kW / lb H_2O evaporated
- The plant currently contains Vogelsang VX186-184Q Rotary Lobe Pumps[8]
- Design Flow Rate = 180 gpm
- Motor Load = 20 Hp
- Assumed Power Factor = 0.059 kW/gpm
- The plant currently contains Vogelsang RC10000 Grinders[9]
- Design Flow Rate = 180 gpm
- Motor Load = 10 Hp
- Assumed Power Factor = 0.031 kW/gpm

---

[3] Per HDR 11/14/11 report "Sand Island Wastewater Treatment Plant Peer Review of Biosolids Management Options."

[4] The R.M. Towill Preliminary Engineering report list the polymer consumption in the centrifuges as 2 – 4 active lb per dry ton

[5] Based on conversation with Synagro during 11/10/11 site visit and meeting

[6] From R.M. Towill Preliminary Engineering Report

[7] From R.M. Towill Preliminary Engineering Report

[8] The model number was provided by Chibby Alloway at Synagro via email on 1/24/11. The flow and motor loads are based on the Vogelsang quotation.

[9] The model number was provided by Chibby Alloway at Synagro via email on 1/24/12. The flow and motor loads are based on the Vogelsang quotation.

- The plant currently contains a Parkson SP4 Strainpress[10]
- The equipment was actually manufactured by Huber and is now sold directly by Huber in the US
- Motor Load = 4 Hp
- Assumed Power Factor = 0.009 kW/gpm
- The plant currently uses Thomas Conveyors for transporting dewatered cake[11]
- Assumed new 80 ft long conveyor for pricing
- Design Throughput = 33 gpm of dewatered cake
- Motor Load = 25 Hp
- Assumed Power Factor = 0.424 kW/gpm (cake)
- Digester
- The existing digester is 2.35 Mgal
- Assumed 24.6 kW per MGal Digester Volume for Digester Mixing Energy[12]
- Capital Cost of 2nd Digester = $23,868,000[13]

New Dryer Assumptions:

- For Option 5
- Sized for one (1) Therma-Flite IC 10,000 unit
- Evaporative Load = 10,000 lbs H_2O / hr
- Approximate cost = $2.8 MM
- Assumed Fuel Requirement = 1450 Btu / lb H_2O evaporated
- Motor Load = 152 Hp
- Brake Hp = 150 Hp
- For Option 6
- Sized for two (2) Therma-Flite IC 7,000 unit
- Evaporative Load = 14,000 lbs H_2O / hr
- Approximate cost = $4.9 MM
- Assumed Fuel Requirement = 1450 Btu / lb H_2O evaporated
- Motor Load = 252 Hp
- Brake Hp = 250 Hp
- For Option 7
- Sized for one (1) IC 7,000 unit
- Evaporative Load = 7,000 lbs H_2O / hr
- Approximate cost = $2.5 MM
- Assumed Fuel Requirement = 1450 Btu / lb H_2O evaporated
- Motor Load = 126 Hp
- Brake Hp = 125 Hp

Ferric Chloride Assumptions

- For Options 1,2 & 3
- Assumed a pre dewatering ferric chloride feed system was used
- Assumed 0.02 gal of ferric chloride was added per lb of dried sludge[14]
- Assumed ferric system motor load = 30 Hp
- Assumed power factor = 0.003 kW/gpm (ferric)

---

[10] The model number was provided by Chibby Alloway at Synagro via email on 1/24/12. The flow and motor loads are based on the Huber quotation.
[11] The vendor name was provided by Chibby Alloway at Synagro via email on 1/24/12. The flow and motor loads are based on the Thomas conveyor quotation.
[12] Based on 24.6 kW per Mgal of mixing energy (M&E pg. 1519, Table 14-32)
[13] Per Synagro proposal cost
[14] Based on values for lime stabilization values for primary sludge (M&E pg. 1503, Table 14-25)

Economic Assumptions

The Economic Factors used in the analysis are:

Electrical Cost	$0.20 per kW-hr[15]
Electrical Inflation	4%
Polymer Cost	$ 1.00 per lb
Polymer Inflation	4%
Ferric Cost	$ 5.90 per gal
Ferric Inflation	3%
No 2. Fuel Cost	$4.58 per gal[16]
Fuel Inflation	3%
Tipping Fee H-Power (Cake)	$ 65.7 per wet ton[17]
Tipping Feed H-Power (Dry)	$ 65.7 per wet ton
Class A Cost	$ 0.0 per wet ton
Hauling Inflation	3%
CHP Gas Cleaning Cost	$0.006 per kW-hr
CHP Gas Cleaning Inflation	3%
Labor Rate	$110.00 per hr
Labor Inflation	3%
Maintenance Inflation	3%
Discount Factor	3%

-
- Assumed 2% of equipment costs for annual maintenance estimates for most equipment
- Assumed 1% of digester cost for annual digester maintenance
- Assumed digested / dried sludge is distributed as Class A (Baseline, Option 1, and Option 7)
- Assumed all undigested and blends of digested and undigested sludge (both dried and cake) is hauled to H-Power.
- 3rd Party Operating Contractor costs, such as Synagro, were not known so they are not included in the analysis.

CHP option assumptions

- 38% Efficiency
- 20% of thermal input can be recovered for dryer heating
- Installed Cost = $ 11,196 per kW[18]
- Gas Cleaning Costs = $0.006 per kW[19]

[15] From cost analysis performed by Ahmad Sadri for HPOWER Comparison (email 8/29/11)

[16] Multiplied mainland prices of $3.05 per gal by 1.5

[17] From 2/1/2012 email from Mike Norris of Covanta that states that the tipping fee will be $15.70 per ton additional cost above the $50 per ton fee for MSW

[18] Based on Honoluliuli TM 10.B.3 for the recommended microturbine option

[19] Based on Honoluliuli TM 10.B.3 for the recommended microturbine option

Transportation Cost assumptions

Staff Labor Cost	$/year/staff	83,200	$40/hr full time
Truck Cost	$/truck	100,000	20 CY truck, 5 year life
Distance per trip	miles/trip	46	
Sludge Hauled per trip	tons/trip	17.6904	20 CY truck
Fuel Cost	$/gallon	5	
Fuel Efficiency	miles/gallon	5	
Total Fuel Cost	$/mile	1	
Truck Maintenance	% Truck Cost/every 2nd year	10%	
Effective Rate	%	2.7%	
Cost Inflation	% increase per year	3%	

Appendix B – Construction and Life-Cycle Cost Calculations

CCH
Sand Island Biosolids Options
Summary

Date:February, 2011
Estimator: RBS
Checker: DS
Cost Index: ENR =9,000

SAND ISLAND BIOSOLIDS STUDY		OPTION						
Specification Division		Option 1 - Dewater Excess Raw Undigested Sludge Transfer Cake to H-Power	Option 2 - Dewater Blended Digested & Undigested Sludge Transfer Cake to H-Power	Option 3 - Dewater & Chemically Stabilize Undigested Sludge Transfer Cake to H-Power	Option 4 - Dry Blended Digested and Undigested Sludge Using Existing Dryer	Option 5 - Dry Blended Digested and Undigested Sludge Using New Dryer	Option 6 - Dry Undigested Sludge Using New Dryer	Option 7 - Dry All Digested Sludge Using New Dryer
Division 0-General Conditions		2,160,548	2,160,548	2,802,617	2,252,116	4,235,757	5,598,819	2,747,150
Division 1- General Requirements		701,920	701,920	701,920	701,920	932,560	932,560	932,560
Division 2- Sitework		23,960	23,960	37,640	35,960	35,960	35,960	23,960
Division 3- Concrete		209,000	209,000	300,500	166,700	166,700	166,700	160,400
Division 4- Masonry		80,000	80,000	95,000	80,000	80,000	80,000	0
Division 5 -Metals		48,080	48,080	65,920	25,040	79,360	104,400	79,360
Division 6 -Wood and Plastics		0	0	0	0	0	0	0
Division 7- Thermal & Moisture Protection		98,100	98,100	107,340	90,480	90,480	90,480	90,480
Division 8- Doors, Windows, & Hardware		9,000	9,000	9,000	9,000	9,000	9,000	9,000
Division 9- Finishes		50,560	50,560	65,120	60,560	60,560	60,560	60,560
Division 10- Specialities		1,160	1,160	1,160	1,160	2,320	3,480	2,320
Division 11- Equipment		2,385,628	2,385,628	3,101,203	2,645,053	6,284,678	8,815,803	3,824,353
Division 12- Furnishings		2,700	2,700	5,400	2,700	5,400	8,100	5,400
Division 13- Special Construction		5,400	5,400	5,400	5,400	10,800	16,200	10,800
Division 14- Conveying Systems		300,000	300,000	450,000	255,000	255,000	255,000	0
Division 15- Mechanical		301,926	301,926	381,458	286,745	286,745	286,745	96,495
Division 16- Electrical		600,750	600,750	889,250	642,500	1,426,500	1,928,500	978,500
Division 17- Instrumentation		221,750	221,750	221,750	195,500	195,500	195,500	195,500
Subtotal-Divisions 1-17		5,039,935	5,039,935	6,438,061	5,203,718	9,921,563	12,988,988	6,469,688
Division 0		2,160,548	2,160,548	2,802,617	2,252,116	4,235,757	5,598,819	2,747,150
ESTIMATED CONSTRUCTION COST		7,200,483	7,200,483	9,240,678	7,455,834	14,157,320	18,587,807	9,216,838
Project Services - Study Phase	20%	1,468,898	1,468,898	1,885,098	1,520,990	2,888,093	3,791,913	1,880,235
TOTAL CURRENT ESTIMATED COST		$8,669,381	$8,669,381	$11,125,776	$8,976,825	$17,045,414	$22,379,720	$11,097,073
Escalation to Mid-Point of Construction	0.0%	0	0	0	0	0	0	0
TOTAL ESTIMATED COST AT MIDPOINT		**$8,669,000**	**$8,669,000**	**$11,126,000**	**$8,977,000**	**$17,045,000**	**$22,380,000**	**$11,097,000**

Note: Insurance, Bonds, Profit & Overhead included in Division 0 for this Cost Estimate

New Digester Capital Cost	25,000,000
Total Option 7 Cost	36,100,000

CCH
Sand Island Biosolids Options
Baseline

Date:February, 2011
Estimator: RBS
Checker: DS
Cost Index: ENR=9,000

Baseline Option - Build a 2nd Digester

	Costs	Percent
Construction Costs	$18,616,000	
Contingency	$1,210,000	6.50%
Subtotal	$19,826,000	
Design	$609,000	3.07%
Permitting	$235,000	1.19%
Contingency	$84,000	9.95%
Subtotal	$928,000	
Ferric Choride System Costs	$593,478	
Subtotal[1]	**$21,347,478**	
Project Services, Study Phase[2]	$4,354,885	20.40%
TOTAL	**$25,702,363**	

1. From Synagro Firm Design Build Costs Provided via email from HDR, on 3/12/2011
2. Project Services, Study Phase Costs Set to be the same as the other seven options

CCH
Sand Island Biosolids Options
Option 1Excess Raw Cake to HPower

Date:February, 2011
Estimator: RBS
Checker: DS
Cost Index: ENR=9,000

Option 1 - Dewater Excess Raw Undigested Sludge Transfer Cake to H-Power

Specification Division	Item Description	Quantity	Unit	Material Unit Cost	Total Material Cost	Installation Unit Cost	Total Installation Cost	Total Unit Cost	Total	Notes
Division 0-General Conditions										
	Mobilization	1	LS		160,672		91,325	251,997	251,997	5% 0f Division 1-17 Subtotal
	Bonds	1	LS		96,403		54,795	151,198	151,198	3% 0f Division 1-17 Subtotal
	Insurance	1	LS		64,269		36,530	100,799	100,799	2.0% 0f Division 1-17 Subtotal
	Overhead and Profit	1	LS		803,358		456,625	1,259,984	1,259,984	25% 0f Division 1-17 Subtotal
	Sales tax	1	LS		144,605		-	144,605	144,605	4.5% of Division 1 - 17 Materials Subtotal
	Miscellaneous Project Expenses	1	LS		160,652		91,314	251,966	251,966	Approximately 5% 0f Division 1-17 Subtotal
Subtotal-Division 0					**1,429,959**		**730,589**		**2,160,548**	
Division 1- General Requirements										
	Field office	18	MO	-	-	1,500.00	27,000	1,500.00	27,000	
	Temporary storage	18	MO	-	-	1,000.00	18,000	1,000.00	18,000	
	Temporary power	18	MO	500.00	9,000	-	-	500.00	9,000	
	Phone and Fax	18	MO	250.00	4,500	-	-	250.00	4,500	
	Project Supervision	18	MO	-	-	33,000.00	594,000	33,000.00	594,000	
	Truck	18	MO	1,500.00	27,000	-	-	1,500.00	27,000	
	Computer	18	MO	290.00	5,220	-	-	290.00	5,220	
	EID/Tag Numbering Coordination	18	MO	-	-	400.00	7,200	400.00	7,200	
	Start up and Testing	1	LS	500.00	500	4,500.00	4,500	5,000.00	5,000	
	Punch list	1	LS	1,000.00	1,000	4,000.00	4,000	5,000.00	5,000	
Subtotal-Division 1									**701,920**	
Division 2- Sitework										
	Site preparation	1,600	SF	-	-	0.25	400	0.25	400	
	Excavation	40	CY	-	-	15.00	600	15.00	600	
	Demolition	1	LS	-	-	10,000.00	10,000	10,000.00	10,000	
	Gravel Base material	10	CY	15.00	150	30.00	300	45.00	450	
	Backfill and Compaction	40	CY	-	-	25.00	1,000	25.00	1,000	
	Dispose Excess Material	10	CY	-	-	95.00	950	95.00	950	
	Fine Grading	1,600	SF	-	-	0.60	960	0.60	960	
	Bollards	8	EA	500.00	4,000	700.00	5,600	1,200.00	9,600	
Subtotal-Division 2									**23,960**	
Division 3- Concrete										
	Centrate Containment Curb and Wall Base	10	CY	120.00	1,200	780.00	7,800	900.00	9,000	
	Bar Reinforcing - 225 lb/cy	27,000	LB	1.00	27,000	1.00	27,000	2.00	54,000	
	Concrete Equipment Pads and Grouting	9	CY	120.00	1,080	780.00	7,020	900.00	8,100	
	Foam Pressure Injection Repair Concrete Deck	400	LF	10.00	4,000	20.00	8,000	30.00	12,000	
	Repair & Patch Existing Floor	1	LS	4,000.00	4,000	4,000.00	4,000	8,000.00	8,000	
	Concrete Fill Electric Room	7	CY	120.00	840	780.00	5,460	900.00	6,300	
	Reinforced Concrete Roof - 2,300 SF	90	CY	120.00	10,800	1,080.00	97,200	1,200.00	108,000	
	Concrete Pipe Supports	4	CY	120.00	480	780.00	3,120	900.00	3,600	
Subtotal-Division 3									**209,000**	
Division 4- Masc										
	Centrifuge Building Masonry - 36 x 64 x 16 FT	3,200	SF	10.00	32,000	15.00	48,000	25.00	80,000	
Subtotal-Division 4									**80,000**	
Division 5 -Metals										
	Grating	320	SF	32.00	10,240	32.00	10,240	64.00	20,480	

CCH
Sand Island Biosolids Options
Option 1Excess Raw Cake to HPower

Specification Division	Item Description	Quantity	Unit	Material Unit Cost	Total Material Cost	Installation Unit Cost	Total Installation Cost	Total Unit Cost	Total	Notes
	Railing	80	LF	40.00	3,200	40.00	3,200	80.00	6,400	
	Wall Bracket Supports	20	EA	160.00	3,200	160.00	3,200	320.00	6,400	
	Base Elbow Supports	20	EA	120.00	2,400	120.00	2,400	240.00	4,800	
	Pipe Hanger Supports	50	EA	100.00	5,000	100.00	5,000	200.00	10,000	
Subtotal-Division 5									**48,080**	
Division 6 -Wood and Plastics										
	Not Used	-		-	-	-	-	-	-	
Subtotal-Division 6									**-**	
Division 7- Thermal & Moisture Protection										
	Scaffolding and Supports	2	EA	10,400.00	20,800	20,800.00	41,600	31,200.00	62,400	
	Aluminum Flashing	200	LF	4.00	800	2.00	400	6.00	1,200	
	Membrane Roofing	2,300	SF	10.00	23,000	5.00	11,500	15.00	34,500	
Subtotal-Division 7									**98,100**	
Division 8- Doors, Windows, & Hardware										
	Doors and Frames	3	EA	1,800.00	5,400	450.00	1,350	2,250.00	6,750	
	Stainless Steel Hardware and Lockset	3	EA	600.00	1,800	150.00	450	750.00	2,250	
Subtotal-Division 8									**9,000**	
Division 9- Finishes										
	Paint Bollards	8	EA	35.00	280	35.00	280	70.00	560	
	Paint Piping, Valves & Equipment	1	LS	25,000.00	25,000	25,000.00	25,000	50,000.00	50,000	
Subtotal-Division 9									**50,560**	
Division 10- Specialities										
	Fire Extiguishers	2	EA	200.00	400	100.00	200	300.00	600	
	Signage	8	EA	50.00	400	20.00	160	70.00	560	
Subtotal-Division 10									**1,160**	
Division 11- Equipment										
	Removal of Mechanical Equipment	1	LS		-	36,000	36,000	36,000	36,000	Removal of Unused Incinerator Equipment
	Rotary Lobe Pumps (20 Hp)	2	EA	32,160	64,320	8,040	16,080	40,200	80,400	Vogelsang VX186-184Q (1/18/12)
	Grinders	2	EA	32,300	64,600	8,075	16,150	40,375	80,750	Vogelsang
	Strainpress (4 Hp)	0	EA	190,000	-	47,500	-	237,500	-	Huber SP4 (1/17/12)
	Centrifuge (100 Hp)	2	EA	410,000	820,000	102,500	205,000	512,500	1,025,000	Andritz D5LL (1/17/12)
	Odor Control System - 6000 cfm biofilter	1	EA	270,000	270,000	67,500	67,500	337,500	337,500	Andritz D5LL (1/17/12)
	Polymer Feed System	1	EA	110,000	110,000	27,500	27,500	137,500	137,500	Acrison Series 500
	Polymer Feed Pumps and VFD (2 Hp)	3	EA	12,000	36,000	3,000	9,000	15,000	45,000	Milroy HPD C
	Ferric Costs	1	EA	474,783	474,783	118,696	118,696	593,478	593,478	Based on Synagro 90% Report
	Dust Collector	1	EA	12,000	12,000	3,000	3,000	15,000	15,000	
	Dryer	0	EA	-	-	-	-	-	-	
	Commissioning and Training	7	EA	500	3,500	4,500	31,500	5,000.00	35,000	
Subtotal-Division 11									**2,385,628**	
Division12- Furnishings										
	Work Station	1	EA	1,800.00	1,800	900.00	900	2,700.00	2,700	
Subtotal-Division 12									**2,700**	
Division 13- Special Construction										
	Fire Alarm	1	EA	3,600.00	3,600	1,800.00	1,800	5,400.00	5,400	
Subtotal-Division 13									**5,400**	
Division 14- Conveying Systems										
	Cake Conveyors (25 Hp)	2	EA	120,000	240,000	30,000	60,000	150,000	300,000	Thomas Conveyor, 80 ft long (1/17/12)

CCH
Sand Island Biosolids Options
Option 1Excess Raw Cake to HPower

Date:February, 2011
Estimator: RBS
Checker: DS
Cost Index: ENR=9,000

Specification Division	Item Description	Quantity	Unit	Material Unit Cost	Total Material Cost	Installation Unit Cost	Total Installation Cost	Total Unit Cost	Total	Notes
Subtotal-Division 14									**300,000**	
Division 15- Mechanical										
	Protect Existing Piping and Valves	1	LS		-	18,000.00	18,000	18,000.00	18,000	
	Raw Sludge Pumping System								-	Cement Lined, Bituminous Coated DIP
	6" Plug Valve	-	EA	3,000.00	-	750.00	-	3,750.00	-	
	8" x 6" Reducers	-	EA	200.00	-	50.00	-	250.00	-	
	6" Tee	-	EA	300.00	-	75.00	-	375.00	-	
	6" 90 Ell	-	EA	150.00	-	37.50	-	187.50	-	
	8" 90 Ell	-	EA	250.00	-	62.50	-	312.50	-	
	6" Check Valve	-	EA	3,400.00	-	850.00	-	4,250.00	-	
	6" x 8" Reducing Elbow	-	EA	240.00	-	60.00	-	300.00	-	
	8" x 8" x 6" Tee	-	EA	400.00	-	100.00	-	500.00	-	
	8" Plug Valve	-	EA	5,000.00	-	1,250.00	-	6,250.00	-	
	8" DI Pipe	-	LF	108.00	-	27.00	-	135.00	-	
	6" DI Pipe	-	LF	77.00	-	19.25	-	96.25	-	
	Centrifuge Feed Pumping System								-	Cement Lined, Bituminous Coated DIP
	6" 90 Ell	8	EA	150.00	1,200	37.50	300	187.50	1,500	
	6" Tee	7	EA	300.00	2,100	75.00	525	375.00	2,625	
	6" x 8" Reducers	4	EA	200.00	800	50.00	200	250.00	1,000	
	8"x 8" x 6" Tee	2	EA	400.00	800	100.00	200	500.00	1,000	
	8" 90 Ell	8	EA	250.00	2,000	62.50	500	312.50	2,500	
	6" Plug Valve	7	EA	3,000.00	21,000	750.00	5,250	3,750.00	26,250	
	8" Plug Valve	3	EA	5,000.00	15,000	1,250.00	3,750	6,250.00	18,750	
	6" Check Valve	2	EA	3,400.00	6,800	850.00	1,700	4,250.00	8,500	
	8" DI Pipe	200	LF	108.00	21,600	27.00	5,400	135.00	27,000	
	6" DI Pipe	200	LF	77.00	15,400	19.25	3,850	96.25	19,250	
	Centrate Drainage System								-	Cement Lined, Bituminous Coated DIP
	8" 90 Ell	4	EA	250.00	1,000	62.50	250	312.50	1,250	
	8 x 6" 90 Ell	4	EA	240.00	960	60.00	240	300.00	1,200	
	8" Tee	4	EA	400.00	1,600	100.00	400	500.00	2,000	
	8" x 8" x 6" Tee	4	EA	400.00	1,600	100.00	400	500.00	2,000	
	8" x 6" Reducers	4	EA	200.00	800	50.00	200	250.00	1,000	
	8" DI Pipe	200	LF	108.00	21,600	27.00	5,400	135.00	27,000	
	6" DI Pipe	200	LF	77.00	15,400	19.25	3,850	96.25	19,250	
	Polymer Feed System									Schedule 80 PVC
	2" PVC Ball Valve	3	EA	200.00	600	50.00	150	250.00	750	
	1" PVC Ball Valve	6	EA	90.00	540	22.50	135	112.50	675	
	1" PVC Ball Check Valve	3	EA	120.00	360	30.00	90	150.00	450	
	2" Tee	3	EA	22.00	66	5.50	17	27.50	83	
	2" 90 Ell	6	EA	18.00	108	4.50	27	22.50	135	
	2"x 2" x 1" Tee	3	EA	18.00	54	4.50	14	22.50	68	
	1" Tee	3	EA	11.00	33	2.75	8	13.75	41	
	1" 90 Ell	12	EA	7.00	84	1.75	21	8.75	105	
	2" PVC Pipe	40	LF	11.00	440	2.75	110	13.75	550	
	1" PVC Pipe	200	LF	5.00	1,000	1.25	250	6.25	1,250	
	Odor Control System Ductwork									FRP
	Supply Fan 10 HP	1	EA	6,000.00	6,000	1,500.00	1,500	7,500.00	7,500	
	12" x 18" Fiberglass Reinforced Plastic Duct	100	LF	150.00	15,000	37.50	3,750	187.50	18,750	
	30" Fiberglass Reinforced Plastic Duct	60	LF	240.00	14,400	60.00	3,600	300.00	18,000	
	16" Fiberglass reinforced plastic duct	100	LF	128.00	12,800	32.00	3,200	160.00	16,000	

CCH
Sand Island Biosolids Options
Option 1Excess Raw Cake to HPower

Specification Division	Item Description	Quantity	Unit	Material Unit Cost	Total Material Cost	Installation Unit Cost	Total Installation Cost	Total Unit Cost	Total	Notes
	Duct Support Trapeze Hanger	32	EA	80.00	2,560	20.00	640	100.00	3,200	
	Electric Room HVAC								-	FRP
	Package Roof Top AC Unit 3 Ton Capacity	1	EA	5,000.00	5,000	1,250.00	1,250	6,250.00	6,250	
	12" x 18" Fiberglass Reinforced Plastic Duct	32	LF	150.00	4,800	37.50	1,200	187.50	6,000	
	30" Fiberglass Reinforced Plastic Duct	12	LF	240.00	2,880	60.00	720	300.00	3,600	
	16" Fiberglass reinforced plastic duct	32	LF	128.00	4,096	32.00	1,024	160.00	5,120	
	Duct Support Trapeze Hanger	12	EA	80.00	960	20.00	240	100.00	1,200	
	Standard Details								-	
	Flexible Coupling	6	EA	800	4,800	200.00	1,200	1,000.00	6,000	
	Hose Bib	2	EA	160	320	40.00	80	200.00	400	
	Hose Rack	2	EA	50	100	12.50	25	62.50	125	
	Floor Drain	2	EA	240	480	60.00	120	300.00	600	
	Flushing Connection	5	EA	320	1,600	80.00	400	400.00	2,000	
	Pressure Gauge Assembly	10	EA	1,200	12,000	300.00	3,000	1,500.00	15,000	
	Seal Water Assembly	2	EA	3,200	6,400	800.00	1,600	4,000.00	8,000	
Subtotal-Division 15									**301,926**	
Division 16- Electrical										
	MCC	1	LS	110,000	110,000	27,500	27,500	137,500	137,500	NEMA 12 Industrial
	Power Wiring Rotary Lobe Pumps (20 Hp)	2	EA	3,200	6,400	800	1,600	4,000	8,000	
	Power Wiring Grinders	2	EA	3,200	6,400	800	1,600	4,000	8,000	
	Power Wiring Strainpress (4 Hp)	0	EA	19,000	-	4,750	-	23,750	-	
	Power Wiring Centrifuge (100 Hp)	2	EA	41,000	82,000	10,250	20,500	51,250	102,500	
	Power Wiring Odor Control System	1	EA	27,000	27,000	6,750	6,750	33,750	33,750	
	Power Wiring Polymer Feed System	1	EA	11,000	11,000	2,750	2,750	13,750	13,750	
	Power Wiring Polymer Feed Pumps & VFD	3	EA	1,200	3,600	300	900	1,500	4,500	
	Power Wiring Dryer	0	EA	284,000	-	71,000	-	355,000	-	
	Power Wiring Cake Conveyors (25 Hp)	2	EA	12,000	24,000	3,000	6,000	15,000	30,000	
	Control Wiring Rotary Lobe Pumps (20 Hp)	2	EA	3,200	6,400	800	1,600	4,000	8,000	
	Control Wiring Grinders	2	EA	3,200	6,400	800	1,600	4,000	8,000	
	Control Wiring Strainpress (4 Hp)	0	EA	19,000	-	4,750	-	23,750	-	
	Control Wiring Centrifuge (100 Hp)	2	EA	41,000	82,000	10,250	20,500	51,250	102,500	
	Control Wiring Odor Control System	1	EA	27,000	27,000	6,750	6,750	33,750	33,750	
	Control Wiring Polymer Feed System	1	EA	11,000	11,000	2,750	2,750	13,750	13,750	
	Control Wiring Polymer Feed Pumps & VFD	3	EA	1,200	3,600	300	900	1,500	4,500	
	Control Wiring Dryer	0	EA	284,000	-	71,000	-	355,000	-	
	Control Wiring Cake Conveyors (25 Hp)	2	EA	12,000	24,000	3,000	6,000	15,000	30,000	
	Disconnect Switches NEMA 4X SS	13	EA	1,600	20,800	400	5,200	2,000	26,000	NEMA 4X
	Temporary Power	1	LS	0	-	-	-	-	-	
	Demolition	1	LS	0	-	-	-	-	-	
	Fiber Optics	1	LS	5,000	5,000	1,250	1,250	6,250	6,250	
	Light Fixtures	18	EA	300	5,400	75	1,350	375.00	6,750	
	Emergency Lighting	2	EA	1,500	3,000	375	750	1,875.00	3,750	
	Receptacles	6	EA	100	600	25	150	125.00	750	
	Transformers	1	EA	3,500	3,500	875	875	4,375.00	4,375	
	Lighting Panels	1	EA	5,000	5,000	1,250	1,250	6,250.00	6,250	
	UPS Panel	1	EA	2,500	2,500	625	625	3,125.00	3,125	
	Commissioning and Training	1	EA	500	500	4,500	4,500	5,000.00	5,000	
									600,750	
Division 17- Instrumentation										
	RIO Panels	1	EA	110,000	110,000	27,500	27,500	137,500.00	137,500	NEMA 4X SS
	Ventilation Alarm and Control Panels	1	EA	3,000	3,000	750	750	3,750.00	3,750	
	Limit Switches	12	EA	600	7,200	150	1,800	750.00	9,000	

CCH
Sand Island Biosolids Options
Option 1Excess Raw Cake to HPower

Date:February, 2011
Estimator: RBS
Checker: DS
Cost Index: ENR=9,000

Specification Division	Item Description	Quantity	Unit	Material Unit Cost	Total Material Cost	Installation Unit Cost	Total Installation Cost	Total Unit Cost	Total	Notes
	Pressure Transmitters	10	EA	2,400	24,000	600	6,000	3,000.00	30,000	
	Float Switches	1	EA	1,200	1,200	300	300	1,500.00	1,500	
	Gas Monitoring System	1	EA	6,000	6,000	1,500	1,500	7,500.00	7,500	
	Ultrasonic Level Sensors	1	EA	4,000	4,000	1,000	1,000	5,000.00	5,000	
	Flow Meters	2	EA	9,000	18,000	2,250	4,500	11,250.00	22,500	
	Commissioning and Training	1	EA	500	500	4,500	4,500	5,000.00	5,000	
Subtotal-Division 17									**221,750**	
Subtotal-Divisions 1-17					3,213,434		1,826,501		5,039,935	
Division 0					1,429,959		730,589		2,160,548	
ESTIMATED CONSTRUCTION COST					**4,643,392**		**2,557,090**		**7,200,483**	
Project Services - Study Phase			20%		947,252		521,646		1,468,898	
TOTAL CURRENT ESTIMATED COST					**5,590,644**		**3,078,737**		**8,669,381**	
Escalation to Mid-Point of Construction			0.0%		-		-		-	
TOTAL ESTIMATED COST AT MIDPOINT					**5,590,644**		**3,078,737**		**8,669,000**	
NOTES:										
1. ENR INDEX = 9,000 (February, 2011)										

CCH
Sand Island Biosolids Options
Option 2 Raw & Dig Cake to HPower

Date:February, 2011
Estimator: RBS
Checker: DS
Cost Index: ENR=9,000

Option 2 - Dewater Blended Digested & Undigested Sludge Transfer Cake to H-Power

Specification Division	Item Description	Quantity	Unit	Material Unit Cost	Total Material Cost	Installation Unit Cost	Total Installation Cost	Total Unit Cost	Total	Notes
Division 0-General Conditions										
	Mobilization	1	LS		160,672		91,325	251,997	251,997	5% 0f Division 1-17 Subtotal
	Bonds	1	LS		96,403		54,795	151,198	151,198	3% 0f Division 1-17 Subtotal
	Insurance	1	LS		64,269		36,530	100,799	100,799	2.0% 0f Division 1-17 Subtotal
	Overhead and Profit	1	LS		803,358		456,625	1,259,984	1,259,984	25% 0f Division 1-17 Subtotal
	Sales tax	1	LS		144,605		-	144,605	144,605	4.5% of Division 1 - 17 Materials Subtotal
	Miscellaneous Project Expenses	1	LS		160,652		91,314	251,966	251,966	Approximately 5% 0f Division 1-17 Subtotal
Subtotal-Division 0					**1,429,959**		**730,589**		**2,160,548**	
Division 1- General Requirements										
	Field office	18	MO	-	-	1,500.00	27,000	1,500.00	27,000	
	Temporary storage	18	MO	-	-	1,000.00	18,000	1,000.00	18,000	
	Temporary power	18	MO	500.00	9,000	-	-	500.00	9,000	
	Phone and Fax	18	MO	250.00	4,500	-	-	250.00	4,500	
	Project Supervision	18	MO	-	-	33,000.00	594,000	33,000.00	594,000	
	Truck	18	MO	1,500.00	27,000	-	-	1,500.00	27,000	
	Computer	18	MO	290.00	5,220	-	-	290.00	5,220	
	EID/Tag Numbering Coordination	18	MO	-	-	400.00	7,200	400.00	7,200	
	Start up and Testing	1	LS	500.00	500	4,500.00	4,500	5,000.00	5,000	
	Punch list	1	LS	1,000.00	1,000	4,000.00	4,000	5,000.00	5,000	
Subtotal-Division 1									**701,920**	
Division 2- Sitework										
	Site preparation	1,600	SF	-	-	0.25	400	0.25	400	
	Excavation	40	CY	-	-	15.00	600	15.00	600	
	Demolition	1	LS	-	-	10,000.00	10,000	10,000.00	10,000	
	Gravel Base material	10	CY	15.00	150	30.00	300	45.00	450	
	Backfill and Compaction	40	CY	-	-	25.00	1,000	25.00	1,000	
	Dispose Excess Material	10	CY	-	-	95.00	950	95.00	950	
	Fine Grading	1,600	SF	-	-	0.60	960	0.60	960	
	Bollards	8	EA	500.00	4,000	700.00	5,600	1,200.00	9,600	
Subtotal-Division 2									**23,960**	
Division 3- Concrete										
	Centrate Containment Curb and Wall Base	10	CY	120.00	1,200	780.00	7,800	900.00	9,000	
	Bar Reinforcing - 225 lb/cy	27,000	LB	1.00	27,000	1.00	27,000	2.00	54,000	
	Concrete Equipment Pads and Grouting	9	CY	120.00	1,080	780.00	7,020	900.00	8,100	
	Foam Pressure Injection Repair Concrete Deck	400	LF	10.00	4,000	20.00	8,000	30.00	12,000	
	Repair & Patch Existing Floor	1	LS	4,000.00	4,000	4,000.00	4,000	8,000.00	8,000	
	Concrete Fill Electric Room	7	CY	120.00	840	780.00	5,460	900.00	6,300	
	Reinforced Concrete Roof - 2,300 SF	90	CY	120.00	10,800	1,080.00	97,200	1,200.00	108,000	
	Concrete Pipe Supports	4	CY	120.00	480	780.00	3,120	900.00	3,600	
Subtotal-Division 3									**209,000**	
Division 4- Masonry										
	Centrifuge Building Masonry - 36 x 64 x 16 FT	3,200	SF	10.00	32,000	15.00	48,000	25.00	80,000	
Subtotal-Division 4									**80,000**	
Division 5 -Metals										
	Grating	320	SF	32.00	10,240	32.00	10,240	64.00	20,480	
	Railing	80	LF	40.00	3,200	40.00	3,200	80.00	6,400	

CCH
Sand Island Biosolids Options
Option 2 Raw & Dig Cake to HPower

Date:February, 2011
Estimator: RBS
Checker: DS
Cost Index: ENR=9,000

Specification Division	Item Description	Quantity	Unit	Material Unit Cost	Total Material Cost	Installation Unit Cost	Total Installation Cost	Total Unit Cost	Total	Notes
	Wall Bracket Supports	20	EA	160.00	3,200	160.00	3,200	320.00	6,400	
	Base Elbow Supports	20	EA	120.00	2,400	120.00	2,400	240.00	4,800	
	Pipe Hanger Supports	50	EA	100.00	5,000	100.00	5,000	200.00	10,000	
Subtotal-Division 5									**48,080**	
Division 6 -Wood and Plastics										
	(Not used)	-		-	-	-	-	-	-	
Subtotal-Division 6									**-**	
Division 7- Thermal & Moisture Protection										
	Scaffolding and Supports	2	EA	10,400.00	20,800	20,800.00	41,600	31,200.00	62,400	
	Aluminum Flashing	200	LF	4.00	800	2.00	400	6.00	1,200	
	Membrane Roofing	2,300	SF	10.00	23,000	5.00	11,500	15.00	34,500	
Subtotal-Division 7									**98,100**	
Division 8- Doors, Windows, & Hardware										
	Doors and Frames	3	EA	1,800.00	5,400	450.00	1,350	2,250.00	6,750	
	Stainless Steel Hardware and Lockset	3	EA	600.00	1,800	150.00	450	750.00	2,250	
Subtotal-Division 8									**9,000**	
Division 9- Finishes										
	Paint Bollards	8	EA	35.00	280	35.00	280	70.00	560	
	Paint Piping, Valves & Equipment	1	LS	25,000.00	25,000	25,000.00	25,000	50,000.00	50,000	
Subtotal-Division 9									**50,560**	
Division 10- Specialities										
	Fire Extiguishers	2	EA	200.00	400	100.00	200	300.00	600	
	Signage	8	EA	50.00	400	20.00	160	70.00	560	
Subtotal-Division 10									**1,160**	
Division 11- Equipment										
	Removal of Mechanical Equipment	1	LS		-	36,000	36,000	36,000	36,000	Removal of Unused Incinerator Equipment
	Rotary Lobe Pumps (20 Hp)	2	EA	32,160	64,320	8,040	16,080	40,200	80,400	Vogelsang VX186-184Q (1/18/12)
	Grinders	2	EA	32,300	64,600	8,075	16,150	40,375	80,750	Vogelsang
	Strainpress (4 Hp)	0	EA	190,000	-	47,500	-	237,500	-	Huber SP4 (1/17/12)
	Centrifuge (100 Hp)	2	EA	410,000	820,000	102,500	205,000	512,500	1,025,000	Andritz D5LL (1/17/12)
	Odor Control System - 6000 cfm biofilter	1	EA	270,000	270,000	67,500	67,500	337,500	337,500	
	Polymer Feed System	1	EA	110,000	110,000	27,500	27,500	137,500	137,500	Acrison Series 500
	Polymer Feed Pumps and VFD (2 Hp)	3	EA	12,000	36,000	3,000	9,000	15,000	45,000	Milroy HPD C
	Ferric Costs	1	EA	474,783	474,783	118,696	118,696	593,478	593,478	Based on Synagro 90% Report
	Dust Collector	1	EA	12,000	12,000	3,000	3,000	15,000	15,000	
	Dryer	0	EA		-	-	-	-	-	
	Commissioning and Training	7	EA	500	3,500	4,500	31,500	5,000.00	35,000	
Subtotal-Division 11									**2,385,628**	
Division12- Furnishings										
	Work Station	1	EA	1,800.00	1,800	900.00	900	2,700.00	2,700	
Subtotal-Division 12									**2,700**	
Division 13- Special Construction										
	Fire Alarm	1	EA	3,600.00	3,600	1,800.00	1,800	5,400.00	5,400	
Subtotal-Division 13									**5,400**	
Division 14- Conveying Systems										
	Cake Conveyors (25 Hp)	2	EA	120,000	240,000	30,000	60,000	150,000	300,000	

CCH
Sand Island Biosolids Options
Option 2 Raw & Dig Cake to HPower

Date:February, 2011
Estimator: RBS
Checker: DS
Cost Index: ENR=9,000

Specification Division	Item Description	Quantity	Unit	Material Unit Cost	Total Material Cost	Installation Unit Cost	Total Installation Cost	Total Unit Cost	Total	Notes
Subtotal-Division 14									**300,000**	
Division 15- Mechanical										
	Protect Existing Piping and Valves	1	LS		-	18,000.00	18,000	18,000.00	18,000	
	Raw Sludge Pumping System								-	Cement Lined, Bituminous Coated DIP
	6" Plug Valve	-	EA	3,000.00	-	750.00	-	3,750.00	-	
	8" x 6" Reducers	-	EA	200.00	-	50.00	-	250.00	-	
	6" Tee	-	EA	300.00	-	75.00	-	375.00	-	
	6" 90 Ell	-	EA	150.00	-	37.50	-	187.50	-	
	8" 90 Ell	-	EA	250.00	-	62.50	-	312.50	-	
	6" Check Valve	-	EA	3,400.00	-	850.00	-	4,250.00	-	
	6" x 8" Reducing Elbow	-	EA	240.00	-	60.00	-	300.00	-	
	8" x 8" x 6" Tee	-	EA	400.00	-	100.00	-	500.00	-	
	8" Plug Valve	-	EA	5,000.00	-	1,250.00	-	6,250.00	-	
	8" DI Pipe	-	LF	108.00	-	27.00	-	135.00	-	
	6" DI Pipe	-	LF	77.00	-	19.25	-	96.25	-	
	Centrifuge Feed Pumping System								-	Cement Lined, Bituminous Coated DIP
	6" 90 Ell	8	EA	150.00	1,200	37.50	300	187.50	1,500	
	6" Tee	7	EA	300.00	2,100	75.00	525	375.00	2,625	
	6" x 8" Reducers	4	EA	200.00	800	50.00	200	250.00	1,000	
	8"x 8" x 6" Tee	2	EA	400.00	800	100.00	200	500.00	1,000	
	8" 90 Ell	8	EA	250.00	2,000	62.50	500	312.50	2,500	
	6" Plug Valve	7	EA	3,000.00	21,000	750.00	5,250	3,750.00	26,250	
	8" Plug Valve	3	EA	5,000.00	15,000	1,250.00	3,750	6,250.00	18,750	
	6" Check Valve	2	EA	3,400.00	6,800	850.00	1,700	4,250.00	8,500	
	8" DI Pipe	200	LF	108.00	21,600	27.00	5,400	135.00	27,000	
	6" DI Pipe	200	LF	77.00	15,400	19.25	3,850	96.25	19,250	
	Centrate Drainage System								-	Cement Lined, Bituminous Coated DIP
	8" 90 Ell	4	EA	250.00	1,000	62.50	250	312.50	1,250	
	8 x 6" 90 Ell	4	EA	240.00	960	60.00	240	300.00	1,200	
	8" Tee	4	EA	400.00	1,600	100.00	400	500.00	2,000	
	8" x 8" x 6" Tee	4	EA	400.00	1,600	100.00	400	500.00	2,000	
	8" x 6" Reducers	4	EA	200.00	800	50.00	200	250.00	1,000	
	8" DI Pipe	200	LF	108.00	21,600	27.00	5,400	135.00	27,000	
	6" DI Pipe	200	LF	77.00	15,400	19.25	3,850	96.25	19,250	
	Polymer Feed System									Schedule 80 PVC
	2" PVC Ball Valve	3	EA	200.00	600	50.00	150	250.00	750	
	1" PVC Ball Valve	6	EA	90.00	540	22.50	135	112.50	675	
	1" PVC Ball Check Valve	3	EA	120.00	360	30.00	90	150.00	450	
	2" Tee	3	EA	22.00	66	5.50	17	27.50	83	
	2" 90 Ell	6	EA	18.00	108	4.50	27	22.50	135	
	2"x 2" x 1" Tee	3	EA	18.00	54	4.50	14	22.50	68	
	1" Tee	3	EA	11.00	33	2.75	8	13.75	41	
	1" 90 Ell	12	EA	7.00	84	1.75	21	8.75	105	
	2" PVC Pipe	40	LF	11.00	440	2.75	110	13.75	550	
	1" PVC Pipe	200	LF	5.00	1,000	1.25	250	6.25	1,250	
	Odor Control System Ductwork									FRP
	Supply Fan 10 HP	1	EA	6,000.00	6,000	1,500.00	1,500	7,500.00	7,500	
	12" x 18" Fiberglass Reinforced Plastic Duct	100	LF	150.00	15,000	37.50	3,750	187.50	18,750	
	30" Fiberglass Reinforced Plastic Duct	60	LF	240.00	14,400	60.00	3,600	300.00	18,000	

CCH
Sand Island Biosolids Options
Option 2 Raw & Dig Cake to HPower

Date:February, 2011
Estimator: RBS
Checker: DS
Cost Index: ENR=9,000

Specification Division	Item Description	Quantity	Unit	Material Unit Cost	Total Material Cost	Installation Unit Cost	Total Installation Cost	Total Unit Cost	Total	Notes
	16" Fiberglass reinforced plastic duct	100	LF	128.00	12,800	32.00	3,200	160.00	16,000	
	Duct Support Trapeze Hanger	32	EA	80.00	2,560	20.00	640	100.00	3,200	
	Electric Room HVAC								-	FRP
	Package Roof Top AC Unit 3 Ton Capacity	1	EA	5,000.00	5,000	1,250.00	1,250	6,250.00	6,250	
	12" x 18" Fiberglass Reinforced Plastic Duct	32	LF	150.00	4,800	37.50	1,200	187.50	6,000	
	30" Fiberglass Reinforced Plastic Duct	12	LF	240.00	2,880	60.00	720	300.00	3,600	
	16" Fiberglass reinforced plastic duct	32	LF	128.00	4,096	32.00	1,024	160.00	5,120	
	Duct Support Trapeze Hanger	12	EA	80.00	960	20.00	240	100.00	1,200	
	Standard Details								-	
	Flexible Coupling	6	EA	800	4,800	200.00	1,200	1,000.00	6,000	
	Hose Bib	2	EA	160	320	40.00	80	200.00	400	
	Hose Rack	2	EA	50	100	12.50	25	62.50	125	
	Floor Drain	2	EA	240	480	60.00	120	300.00	600	
	Flushing Connection	5	EA	320	1,600	80.00	400	400.00	2,000	
	Pressure Gauge Assembly	10	EA	1,200	12,000	300.00	3,000	1,500.00	15,000	
	Seal Water Assembly	2	EA	3,200	6,400	800.00	1,600	4,000.00	8,000	
Subtotal-Division 15									**301,926**	
Division 16- Electrical										
	MCC	1	LS	110,000	110,000	27,500	27,500	137,500	137,500	NEMA 12 Industrial
	Power Wiring Rotary Lobe Pumps (20 Hp)	2	EA	3,200	6,400	800	1,600	4,000	8,000	
	Power Wiring Grinders	2	EA	3,200	6,400	800	1,600	4,000	8,000	
	Power Wiring Strainpress (4 Hp)	0	EA	19,000	-	4,750	-	23,750	-	
	Power Wiring Centrifuge (100 Hp)	2	EA	41,000	82,000	10,250	20,500	51,250	102,500	
	Power Wiring Odor Control System	1	EA	27,000	27,000	6,750	6,750	33,750	33,750	
	Power Wiring Polymer Feed System	1	EA	11,000	11,000	2,750	2,750	13,750	13,750	
	Power Wiring Polymer Feed Pumps & VFD	3	EA	1,200	3,600	300	900	1,500	4,500	
	Power Wiring Dryer	0	EA	284,000	-	71,000	-	355,000	-	
	Power Wiring Cake Conveyors (25 Hp)	2	EA	12,000	24,000	3,000	6,000	15,000	30,000	
	Control Wiring Rotary Lobe Pumps (20 Hp)	2	EA	3,200	6,400	800	1,600	4,000	8,000	
	Control Wiring Grinders	2	EA	3,200	6,400	800	1,600	4,000	8,000	
	Control Wiring Strainpress (4 Hp)	0	EA	19,000	-	4,750	-	23,750	-	
	Control Wiring Centrifuge (100 Hp)	2	EA	41,000	82,000	10,250	20,500	51,250	102,500	
	Control Wiring Odor Control System	1	EA	27,000	27,000	6,750	6,750	33,750	33,750	
	Control Wiring Polymer Feed System	1	EA	11,000	11,000	2,750	2,750	13,750	13,750	
	Control Wiring Polymer Feed Pumps & VFD	3	EA	1,200	3,600	300	900	1,500	4,500	
	Control Wiring Dryer	0	EA	284,000	-	71,000	-	355,000	-	
	Control Wiring Cake Conveyors (25 Hp)	2	EA	12,000	24,000	3,000	6,000	15,000	30,000	
	Disconnect Switches NEMA 4X SS	13	EA	1,600	20,800	400	5,200	2,000	26,000	NEMA 4X
	Temporary Power	1	LS	0	-	-	-	-	-	
	Demolition	1	LS	0	-	-	-	-	-	
	Fiber Optics	1	LS	5,000	5,000	1,250	1,250	6,250	6,250	
	Light Fixtures	18	EA	300	5,400	75	1,350	375.00	6,750	
	Emergency Lighting	2	EA	1,500	3,000	375	750	1,875.00	3,750	
	Receptacles	6	EA	100	600	25	150	125.00	750	
	Transformers	1	EA	3,500	3,500	875	875	4,375.00	4,375	
	Lighting Panels	1	EA	5,000	5,000	1,250	1,250	6,250.00	6,250	
	UPS Panel	1	EA	2,500	2,500	625	625	3,125.00	3,125	
	Commissioning and Training	1	EA	500	500	4,500	4,500	5,000.00	5,000	
Subtotal-Division 16									**600,750**	
Division 17- Instrumentation										
	RIO Panels	1	EA	110,000	110,000	27,500	27,500	137,500.00	137,500	NEMA 4X SS

CCH
Sand Island Biosolids Options
Option 2 Raw & Dig Cake to HPower

Date:February, 2011
Estimator: RBS
Checker: DS
Cost Index: ENR=9,000

Specification Division	Item Description	Quantity	Unit	Material Unit Cost	Total Material Cost	Installation Unit Cost	Total Installation Cost	Total Unit Cost	Total	Notes
	Ventilation Alarm and Control Panels	1	EA	3,000	3,000	750	750	3,750.00	3,750	
	Limit Switches	12	EA	600	7,200	150	1,800	750.00	9,000	
	Pressure Transmitters	10	EA	2,400	24,000	600	6,000	3,000.00	30,000	
	Float Switches	1	EA	1,200	1,200	300	300	1,500.00	1,500	
	Gas Monitoring System	1	EA	6,000	6,000	1,500	1,500	7,500.00	7,500	
	Ultrasonic Level Sensors	1	EA	4,000	4,000	1,000	1,000	5,000.00	5,000	
	Flow Meters	2	EA	9,000	18,000	2,250	4,500	11,250.00	22,500	
	Commissioning and Training	1	EA	500	500	4,500	4,500	5,000.00	5,000	
Subtotal-Division 17									**221,750**	
Subtotal-Divisions 1-17					3,213,434		1,826,501		5,039,935	
Division 0					1,429,959		730,589		2,160,548	
ESTIMATED CONSTRUCTION COST					**4,643,392**		**2,557,090**		**7,200,483**	
Project Services - Study Phase			20%		947,252		521,646		1,468,898	
TOTAL CURRENT ESTIMATED COST					**5,590,644**		**3,078,737**		**8,669,381**	
Escalation to Mid-Point of Construction			0.0%		-		-		-	
TOTAL ESTIMATED COST AT MIDPOINT					**5,590,644**		**3,078,737**		**8,669,000**	
NOTES:										
1. ENR INDEX = 9,000 (February, 2011)										

CCH
Sand Island Biosolids Options
Option 3 Chem Stab Cake to HPower

Date:February, 2011
Estimator: RBS
Checker: DS
Cost Index: ENRLA=9,000

Option 3 - Dewater & Chemically Stabilize Undigested Sludge Transfer Cake to H-Power

Specification Division	Item Description	Quantity	Unit	Material Unit Cost	Total Material Cost	Installation Unit Cost	Total Installation Cost	Total Unit Cost	Total	Notes
Division 0-General Conditions										
	Mobilization	1	LS		214,376		109,777	324,153	324,153	5% 0f Division 1-17 Subtotal
	Bonds	1	LS		128,626		65,866	194,492	194,492	3% 0f Division 1-17 Subtotal
	Insurance	1	LS		85,751		43,911	129,661	129,661	2.0% 0f Division 1-17 Subtotal
	Overhead and Profit	1	LS		1,071,882		548,883	1,620,765	1,620,765	25% 0f Division 1-17 Subtotal
	Sales tax	1	LS		192,939		-	192,939	192,939	4.5% of Division 1 - 17 Materials Subtotal
	Miscellaneous Project Expenses	1	LS		225,258		115,349	340,607	340,607	Approximately 5% 0f Division 1-17 Subtotal
Subtotal-Division 0					**1,918,832**		**883,785**		**2,802,617**	
Division 1- General Requirements										
	Field office	18	MO	-	-	1,500.00	27,000	1,500.00	27,000	
	Temporary storage	18	MO	-	-	1,000.00	18,000	1,000.00	18,000	
	Temporary power	18	MO	500.00	9,000	-	-	500.00	9,000	
	Phone and Fax	18	MO	250.00	4,500	-	-	250.00	4,500	
	Project Supervision	18	MO	-	-	33,000.00	594,000	33,000.00	594,000	
	Truck	18	MO	1,500.00	27,000	-	-	1,500.00	27,000	
	Computer	18	MO	290.00	5,220	-	-	290.00	5,220	
	EID/Tag Numbering Coordination	18	MO	-	-	400.00	7,200	400.00	7,200	
	Start up and Testing	1	LS	500.00	500	4,500.00	4,500	5,000.00	5,000	
	Punch list	1	LS	1,000.00	1,000	4,000.00	4,000	5,000.00	5,000	
Subtotal-Division 1									**701,920**	
Division 2- Sitework										
	Site preparation	2,400	SF	-	-	0.25	600	0.25	600	
	Excavation	80	CY	-	-	15.00	1,200	15.00	1,200	
	Demolition	1	LS	-	-	10,000.00	10,000	10,000.00	10,000	
	Gravel Base material	40	CY	15.00	600	30.00	1,200	45.00	1,800	
	Backfill and Compaction	60	CY	-	-	25.00	1,500	25.00	1,500	
	Dispose Excess Material	20	CY	-	-	95.00	1,900	95.00	1,900	
	Fine Grading	2,400	SF	-	-	0.60	1,440	0.60	1,440	
	Bollards	16	EA	500.00	8,000	700.00	11,200	1,200.00	19,200	
Subtotal-Division 2									**37,640**	
Division 3- Concrete										
	Centrate Containment Curb and Wall Base	15	CY	120.00	1,800	780.00	11,700	900.00	13,500	Equipment pads
	Silo Foundation	25	CY	120.00	3,000	780.00	19,500	900.00	22,500	
	Bar Reinforcing - 225 lb/cy	40,000	LB	1.00	40,000	1.00	40,000	2.00	80,000	
	Concrete Equipment Pads and Grouting	12	CY	120.00	1,440	780.00	9,360	900.00	10,800	
	Foam Pressure Injection Repair Concrete Deck	600	LF	10.00	6,000	20.00	12,000	30.00	18,000	
	Repair & Patch Existing Floor	1	LS	6,000.00	6,000	6,000.00	6,000	12,000.00	12,000	
	Concrete Fill Electric Room	7	CY	120.00	840	780.00	5,460	900.00	6,300	
	Reinforced Concrete Roof - 2,900 SF	110	CY	120.00	13,200	1,080.00	118,800	1,200.00	132,000	
	Concrete Pipe Supports	6	CY	120.00	720	780.00	4,680	900.00	5,400	
Subtotal-Division 3									**300,500**	
Division 4- Masonry										
	Centrifuge Building Masonry - 36 x 80 x 16 FT	3,800	SF	10.00	38,000	15.00	57,000	25.00	95,000	
Subtotal-Division 4									**95,000**	
Division 5 -Metals										
	Grating	480	SF	32.00	15,360	32.00	15,360	64.00	30,720	
	Railing	120	LF	40.00	4,800	40.00	4,800	80.00	9,600	
	Wall Bracket Supports	20	EA	160.00	3,200	160.00	3,200	320.00	6,400	
	Base Elbow Supports	30	EA	120.00	3,600	120.00	3,600	240.00	7,200	

CCH
Sand Island Biosolids Options
Option 3 Chem Stab Cake to HPower

Date:February, 2011
Estimator: RBS
Checker: DS
Cost Index: ENRLA=9,000

Specification Division	Item Description	Quantity	Unit	Material Unit Cost	Total Material Cost	Installation Unit Cost	Total Installation Cost	Total Unit Cost	Total	Notes
	Pipe Hanger Supports	60	EA	100.00	6,000	100.00	6,000	200.00	12,000	
Subtotal-Division 5									**65,920**	
Division 6 -Wood and Plastics										
	(Not used)	-		-	-	-	-	-	-	
Subtotal-Division 6									**-**	
Division 7- Thermal & Moisture Protection										
	Scaffolding and Supports	2	EA	10,400.00	20,800	20,800.00	41,600	31,200.00	62,400	
	Aluminum Flashing	240	LF	4.00	960	2.00	480	6.00	1,440	
	Membrane Roofing	2,900	SF	10.00	29,000	5.00	14,500	15.00	43,500	
Subtotal-Division 7									**107,340**	
Division 8- Doors, Windows, & Hardware										
	Doors and Frames	3	EA	1,800.00	5,400	450.00	1,350	2,250.00	6,750	
	Stainless Steel Hardware and Lockset	3	EA	600.00	1,800	150.00	450	750.00	2,250	
Subtotal-Division 8									**9,000**	
Division 9- Finishes										
	Paint Bollards	16	EA	35.00	560	35.00	560	70.00	1,120	
	Paint Piping, Valves & Equipment	1	LS	32,000.00	32,000	32,000.00	32,000	64,000.00	64,000	
Subtotal-Division 9									**65,120**	
Division 10- Specialities										
	Fire Extiguishers	2	EA	200.00	400	100.00	200	300.00	600	
	Signage	8	EA	50.00	400	20.00	160	70.00	560	
Subtotal-Division 10									**1,160**	
Division 11- Equipment										
	Removal of Mechanical Equipment	1	LS		-	36,000	36,000	36,000	36,000	Removal of Unused Incinerator Equipment
	Rotary Lobe Pumps (20 Hp)	3	EA	32,160	96,480	8,040	24,120	40,200	120,600	Vogelsang VX186-184Q (1/18/12)
	Grinders	3	EA	32,300	96,900	8,075	24,225	40,375	121,125	Vogelsang
	Strainpress (4 Hp)	0	EA	190,000	-	47,500	-	237,500	-	Huber SP4 (1/17/12)
	Centrifuge (100 Hp)	3	EA	410,000	1,230,000	102,500	307,500	512,500	1,537,500	Andritz D5LL (1/17/12)
	Odor Control System - 8000 cfm biofilter	1	EA	360,000	360,000	90,000	90,000	450,000	450,000	
	Polymer Feed System	1	EA	110,000	110,000	27,500	27,500	137,500	137,500	Acrison Series 500
	Polymer Feed Pumps and VFD (2 Hp)	4	EA	12,000	48,000	3,000	12,000	15,000	60,000	Milroy HPD C
	Ferric Costs	1	EA	474,783	474,783	118,696	118,696	593,478	593,478	Based on Synagro 90% Report
	Dust Collector	0	EA	12,000	-	3,000	-	15,000	-	
	Dryer	0	EA		-	-	-	-	-	
	Commissioning and Training	9	EA	500	4,500	4,500	40,500	5,000.00	45,000	
Subtotal-Division 11									**3,101,203**	
Division12- Furnishings										
	Work Station	2	EA	1,800.00	3,600	900.00	1,800	2,700.00	5,400	
Subtotal-Division 12									**5,400**	
Division 13- Special Construction										
	Fire Alarm	1	EA	3,600.00	3,600	1,800.00	1,800	5,400.00	5,400	
Subtotal-Division 13									**5,400**	
Division 14- Conveying Systems										
	Cake Conveyors (25 Hp)	3	EA	$120,000.00	360,000	30,000	90,000	150,000	450,000	Thomas Conveyor, 80 ft long (1/17/12)
Subtotal-Division 14									**450,000**	
Division 15- Mechanical										
	Protect Existing Piping and Valves	1	LS		-	18,000.00	18,000	18,000.00	18,000	

CCH
Sand Island Biosolids Options
Option 3 Chem Stab Cake to HPower

Specification Division	Item Description	Quantity	Unit	Material Unit Cost	Total Material Cost	Installation Unit Cost	Total Installation Cost	Total Unit Cost	Total	Notes
	Raw Sludge Pumping System								-	Cement Lined, Bituminous Coated DIP
	6" Plug Valve	-	EA	3,000.00	-	750.00	-	3,750.00	-	
	8" x 6" Reducers	-	EA	200.00	-	50.00	-	250.00	-	
	6" Tee	-	EA	300.00	-	75.00	-	375.00	-	
	6" 90 Ell	-	EA	150.00	-	37.50	-	187.50	-	
	8" 90 Ell	-	EA	250.00	-	62.50	-	312.50	-	
	6" Check Valve	-	EA	3,400.00	-	850.00	-	4,250.00	-	
	6" x 8" Reducing Elbow	-	EA	240.00	-	60.00	-	300.00	-	
	8" x 8" x 6" Tee	-	EA	400.00	-	100.00	-	500.00	-	
	8" Plug Valve	-	EA	5,000.00	-	1,250.00	-	6,250.00	-	
	8" DI Pipe	-	LF	108.00	-	27.00	-	135.00	-	
	6" DI Pipe	-	LF	77.00	-	19.25	-	96.25	-	
	Centrifuge Feed Pumping System								-	Cement Lined, Bituminous Coated DIP
	6" 90 Ell	10	EA	150.00	1,500	37.50	375	187.50	1,875	
	6" Tee	9	EA	300.00	2,700	75.00	675	375.00	3,375	
	6" x 8" Reducers	6	EA	200.00	1,200	50.00	300	250.00	1,500	
	8"x 8" x 6" Tee	4	EA	400.00	1,600	100.00	400	500.00	2,000	
	8" 90 Ell	12	EA	250.00	3,000	62.50	750	312.50	3,750	
	6" Plug Valve	9	EA	3,000.00	27,000	750.00	6,750	3,750.00	33,750	
	8" Plug Valve	4	EA	5,000.00	20,000	1,250.00	5,000	6,250.00	25,000	
	6" Check Valve	3	EA	3,400.00	10,200	850.00	2,550	4,250.00	12,750	
	8" DI Pipe	240	LF	108.00	25,920	27.00	6,480	135.00	32,400	
	6" DI Pipe	240	LF	77.00	18,480	19.25	4,620	96.25	23,100	
	Centrate Drainage System								-	Cement Lined, Bituminous Coated DIP
	8" 90 Ell	6	EA	250.00	1,500	62.50	375	312.50	1,875	
	8 x 6" 90 Ell	6	EA	240.00	1,440	60.00	360	300.00	1,800	
	8" Tee	6	EA	400.00	2,400	100.00	600	500.00	3,000	
	8" x 8" x 6" Tee	6	EA	400.00	2,400	100.00	600	500.00	3,000	
	8" x 6" Reducers	6	EA	200.00	1,200	50.00	300	250.00	1,500	
	8" DI Pipe	240	LF	108.00	25,920	27.00	6,480	135.00	32,400	
	6" DI Pipe	240	LF	77.00	18,480	19.25	4,620	96.25	23,100	
	Polymer Feed System									Schedule 80 PVC
	2" PVC Ball Valve	4	EA	200.00	800	50.00	200	250.00	1,000	
	1" PVC Ball Valve	8	EA	90.00	720	22.50	180	112.50	900	
	1" PVC Ball Check Valve	4	EA	120.00	480	30.00	120	150.00	600	
	2" Tee	4	EA	22.00	88	5.50	22	27.50	110	
	2" 90 Ell	8	EA	18.00	144	4.50	36	22.50	180	
	2"x 2" x 1" Tee	4	EA	18.00	72	4.50	18	22.50	90	
	1" Tee	4	EA	11.00	44	2.75	11	13.75	55	
	1" 90 Ell	16	EA	7.00	112	1.75	28	8.75	140	
	2" PVC Pipe	50	LF	11.00	550	2.75	138	13.75	688	
	1" PVC Pipe	250	LF	5.00	1,250	1.25	313	6.25	1,563	
	Odor Control System Ductwork									FRP
	Supply Fan 15 HP	1	EA	8,000.00	8,000	2,000.00	2,000	10,000.00	10,000	
	16" x 18" Fiberglass Reinforced Plastic Duct	140	LF	160.00	22,400	40.00	5,600	200.00	28,000	
	36" Fiberglass Reinforced Plastic Duct	60	LF	300.00	18,000	75.00	4,500	375.00	22,500	
	16" Fiberglass reinforced plastic duct	140	LF	128.00	17,920	32.00	4,480	160.00	22,400	
	Duct Support Trapeze Hanger	48	EA	80.00	3,840	20.00	960	100.00	4,800	
	Electric Room HVAC								-	FRP
	Package Roof Top AC Unit 3 Ton Capacity	1	EA	5,000.00	5,000	1,250.00	1,250	6,250.00	6,250	
	12" x 18" Fiberglass Reinforced Plastic Duct	32	LF	150.00	4,800	37.50	1,200	187.50	6,000	

CCH
Sand Island Biosolids Options
Option 3 Chem Stab Cake to HPower

Specification Division	Item Description	Quantity	Unit	Material Unit Cost	Total Material Cost	Installation Unit Cost	Total Installation Cost	Total Unit Cost	Total	Notes
	30" Fiberglass Reinforced Plastic Duct	12	LF	240.00	2,880	60.00	720	300.00	3,600	
	16" Fiberglass reinforced plastic duct	32	LF	128.00	4,096	32.00	1,024	160.00	5,120	
	Duct Support Trapeze Hanger	12	EA	80.00	960	20.00	240	100.00	1,200	
	Standard Details								-	
	Flexible Coupling	8	EA	800	6,400	200.00	1,600	1,000.00	8,000	
	Hose Bib	3	EA	160	480	40.00	120	200.00	600	
	Hose Rack	3	EA	50	150	12.50	38	62.50	188	
	Floor Drain	3	EA	240	720	60.00	180	300.00	900	
	Flushing Connection	6	EA	320	1,920	80.00	480	400.00	2,400	
	Pressure Gauge Assembly	12	EA	1,200	14,400	300.00	3,600	1,500.00	18,000	
	Seal Water Assembly	3	EA	3,200	9,600	800.00	2,400	4,000.00	12,000	
Subtotal-Division 15									**381,458**	
Division 16- Electrical										
	MCC	1	LS	160,000	160,000	40,000	40,000	200,000	200,000	NEMA 12 Industrial
	Power Wiring Rotary Lobe Pumps (20 Hp)	3	EA	3,200	9,600	800	2,400	4,000	12,000	
	Power Wiring Grinders	3	EA	3,200	9,600	800	2,400	4,000	12,000	
	Power Wiring Strainpress (4 Hp)	0	EA	19,000	-	4,750	-	23,750	-	
	Power Wiring Centrifuge (100 Hp)	3	EA	41,000	123,000	10,250	30,750	51,250	153,750	
	Power Wiring Odor Control System	1	EA	36,000	36,000	9,000	9,000	45,000	45,000	
	Power Wiring Polymer Feed System	1	EA	11,000	11,000	2,750	2,750	13,750	13,750	
	Power Wiring Polymer Feed Pumps & VFD	4	EA	1,200	4,800	300	1,200	1,500	6,000	
	Power Wiring Lime Storage Silo and Feed System	1	EA	32,000	32,000	8,000	8,000	40,000	40,000	
	Power Wiring Dust Collector	1	EA	1,200	1,200	300	300	1,500	1,500	
	Power Wiring Dryer	0	EA	284,000	-	71,000	-	355,000	-	
	Power Wiring Cake Conveyors (25 Hp)	3	EA	12,000	36,000	3,000	9,000	15,000		
	Control Wiring Rotary Lobe Pumps (20 Hp)	3	EA	3,200	9,600	800	2,400	4,000	12,000	
	Control Wiring Grinders	3	EA	3,200	9,600	800	2,400	4,000	12,000	
	Control Wiring Strainpress (4 Hp)	0	EA	19,000	-	4,750	-	23,750	-	
	Control Wiring Centrifuge (100 Hp)	3	EA	41,000	123,000	10,250	30,750	51,250	153,750	
	Control Wiring Odor Control System	1	EA	36,000	36,000	9,000	9,000	45,000	45,000	
	Control Wiring Polymer Feed System	1	EA	11,000	11,000	2,750	2,750	13,750	13,750	
	Control Wiring Polymer Feed Pumps & VFD	4	EA	1,200	4,800	300	1,200	1,500	6,000	
	Control Wiring Lime Storage Silo and Feed System	1	EA	32,000	32,000	8,000	8,000	40,000	40,000	
	Control Wiring Dust Collector	1	EA	1,200	1,200	300	300	1,500	1,500	
	Control Wiring Dryer	0	EA	284,000	-	71,000	-	355,000	-	
	Control Wiring Cake Conveyors (25 Hp)	3	EA	12,000	36,000	3,000	9,000	15,000	45,000	
	Disconnect Switches NEMA 4X SS	20	EA	1,600	32,000	400	8,000	2,000	40,000	NEMA 4X
	Temporary Power	1	LS	0	-	-	-	-	-	
	Demolition	1	LS	0	-	-	-	-	-	
	Fiber Optics	1	LS	5,000	5,000	1,250	1,250	6,250	6,250	
	Light Fixtures	18	EA	300	5,400	75	1,350	375.00	6,750	
	Emergency Lighting	2	EA	1,500	3,000	375	750	1,875.00	3,750	
	Receptacles	6	EA	100	600	25	150	125.00	750	
	Transformers	1	EA	3,500	3,500	875	875	4,375.00	4,375	
	Lighting Panels	1	EA	5,000	5,000	1,250	1,250	6,250.00	6,250	
	UPS Panel	1	EA	2,500	2,500	625	625	3,125.00	3,125	
	Commissioning and Training	1	EA	500	500	4,500	4,500	5,000.00	5,000	
Subtotal-Division 16									**889,250**	
Division 17- Instrumentation										
	RIO Panels	1	EA	110,000	110,000	27,500	27,500	137,500.00	137,500	NEMA 4X SS
	Ventilation Alarm and Control Panels	1	EA	3,000	3,000	750	750	3,750.00	3,750	
	Limit Switches	12	EA	600	7,200	150	1,800	750.00	9,000	
	Pressure Transmitters	10	EA	2,400	24,000	600	6,000	3,000.00	30,000	
	Float Switches	1	EA	1,200	1,200	300	300	1,500.00	1,500	

CCH
Sand Island Biosolids Options
Option 3 Chem Stab Cake to HPower

Date:February, 2011
Estimator: RBS
Checker: DS
Cost Index: ENRLA=9,000

Specification Division	Item Description	Quantity	Unit	Material Unit Cost	Total Material Cost	Installation Unit Cost	Total Installation Cost	Total Unit Cost	Total	Notes
	Gas Monitoring System	1	EA	6,000	6,000	1,500	1,500	7,500.00	7,500	
	Ultrasonic Level Sensors	1	EA	4,000	4,000	1,000	1,000	5,000.00	5,000	
	Flow Meters	2	EA	9,000	18,000	2,250	4,500	11,250.00	22,500	
	Commissioning and Training	1	EA	500	500	4,500	4,500	5,000.00	5,000	
Subtotal-Division 17									**221,750**	
Subtotal-Divisions 1-17					4,287,529		2,195,532		6,438,061	
Division 0					1,918,832		883,785		2,802,617	
ESTIMATED CONSTRUCTION COST					**6,206,361**		**3,079,317**		**9,240,678**	
Project Services - Study Phase			20%		1,266,098		628,181		1,885,098	
TOTAL CURRENT ESTIMATED COST					**7,472,458**		**3,707,498**		**11,125,776**	
Escalation to Mid-Point of Construction			0.0%		-		-		-	
TOTAL ESTIMATED COST AT MIDPOINT					**7,472,458**		**3,707,498**		**11,126,000**	
NOTES:										
1. ENR INDEX = 9,000 (February, 2011)										

CCH
Sand Island Biosolids Options
Option 4 Raw & Dig Exist Dryer

Date:February, 2011
Estimator: RBS
Checker: DS
Cost Index: ENR=9,000

Option 4 - Dry Blended Digested and Undigested Sludge Using Existing Dryer

Specification Division	Item Description	Quantity	Unit	Material Unit Cost	Total Material Cost	Installation Unit Cost	Total Installation Cost	Total Unit Cost	Total	Notes
Division 0-General Conditions										
	Mobilization	1	LS		167,924		92,261	260,186	260,186	5% 0f Division 1-17 Subtotal
	Bonds	1	LS		100,755		55,357	156,112	156,112	3% 0f Division 1-17 Subtotal
	Insurance	1	LS		67,170		36,905	104,074	104,074	2.0% 0f Division 1-17 Subtotal
	Overhead and Profit	1	LS		839,622		461,307	1,300,930	1,300,930	25% 0f Division 1-17 Subtotal
	Sales tax	1	LS		151,132		-	151,132	151,132	4.5% of Division 1 - 17 Materials Subtotal
	Miscellaneous Project Expenses	1	LS		180,508		99,175	279,683	279,683	Approximately 5% 0f Division 1-17 Subtotal
Subtotal-Division 0					**1,507,111**		**745,005**		**2,252,116**	
Division 1- General Requirements										
	Field office	18	MO	-	-	1,500.00	27,000	1,500.00	27,000	
	Temporary storage	18	MO	-	-	1,000.00	18,000	1,000.00	18,000	
	Temporary power	18	MO	500.00	9,000	-	-	500.00	9,000	
	Phone and Fax	18	MO	250.00	4,500	-	-	250.00	4,500	
	Project Supervision	18	MO	-	-	33,000.00	594,000	33,000.00	594,000	
	Truck	18	MO	1,500.00	27,000	-	-	1,500.00	27,000	
	Computer	18	MO	290.00	5,220	-	-	290.00	5,220	
	EID/Tag Numbering Coordination	18	MO	-	-	400.00	7,200	400.00	7,200	
	Start up and Testing	1	LS	500.00	500	4,500.00	4,500	5,000.00	5,000	
	Punch list	1	LS	1,000.00	1,000	4,000.00	4,000	5,000.00	5,000	
Subtotal-Division 1									**701,920**	
Division 2- Sitework										
	Site preparation	1,600	SF	-	-	0.25	400	0.25	400	
	Excavation	40	CY	-	-	15.00	600	15.00	600	
	Demolition	1	LS	-	-	10,000.00	10,000	10,000.00	10,000	
	Gravel Base material	10	CY	15.00	150	30.00	300	45.00	450	
	Backfill and Compaction	40	CY	-	-	25.00	1,000	25.00	1,000	
	Dispose Excess Material	10	CY	-	-	95.00	950	95.00	950	
	Fine Grading	1,600	SF	-	-	0.60	960	0.60	960	
	Core Drill Sludge Holding Tank for Strainpress	4	EA	600.00	2,400	2,400.00	9,600	3,000.00	12,000	
	Bollards	8	EA	500.00	4,000	700.00	5,600	1,200.00	9,600	
Subtotal-Division 2									**35,960**	
Division 3- Concrete										
	Centrate Containment Curb and Wall Base	7	CY	120.00	840	780.00	5,460	900.00	6,300	Equipment pads
	Bar Reinforcing - 225 lb/cy	21,000	LB	1.00	21,000	1.00	21,000	2.00	42,000	
	Concrete Equipment Pads and Grouting	6	CY	120.00	720	780.00	4,680	900.00	5,400	
	Foam Pressure Injection Repair Concrete Deck	400	LF	10.00	4,000	20.00	8,000	30.00	12,000	
	Repair & Patch Existing Floor	1	LS	4,000.00	4,000	4,000.00	4,000	8,000.00	8,000	
	Concrete Fill Electric Room	7	CY	120.00	840	780.00	5,460	900.00	6,300	
	Reinforced Concrete Roof - 1,800 SF	70	CY	120.00	8,400	1,080.00	75,600	1,200.00	84,000	
	Concrete Pipe Supports	3	CY	120.00	360	780.00	2,340	900.00	2,700	
Subtotal-Division 3									**166,700**	
Division 4- Masonry										
	Centrifuge Building Masonry - 36 x 50 x 16 FT	3,200	SF	10.00	32,000	15.00	48,000	25.00	80,000	
Subtotal-Division 4									**80,000**	
Division 5 -Metals										
	Grating	160	SF	32.00	5,120	32.00	5,120	64.00	10,240	
	Railing	40	LF	40.00	1,600	40.00	1,600	80.00	3,200	
	Wall Bracket Supports	10	EA	160.00	1,600	160.00	1,600	320.00	3,200	

CCH
Sand Island Biosolids Options
Option 4 Raw & Dig Exist Dryer

Date:February, 2011
Estimator: RBS
Checker: DS
Cost Index: ENR=9,000

Specification Division	Item Description	Quantity	Unit	Material Unit Cost	Total Material Cost	Installation Unit Cost	Total Installation Cost	Total Unit Cost	Total	Notes
	Base Elbow Supports	10	EA	120.00	1,200	120.00	1,200	240.00	2,400	
	Pipe Hanger Supports	30	EA	100.00	3,000	100.00	3,000	200.00	6,000	
Subtotal-Division 5									**25,040**	
Division 6 -Wood and Plastics										
	(Not used)	-		-	-	-	-	-	-	
Subtotal-Division 6									**-**	
Division 7- Thermal & Moisture Protection										
	Scaffolding and Supports	2	EA	10,400.00	20,800	20,800.00	41,600	31,200.00	62,400	
	Aluminum Flashing	180	LF	4.00	720	2.00	360	6.00	1,080	
	Membrane Roofing	1,800	SF	10.00	18,000	5.00	9,000	15.00	27,000	
Subtotal-Division 7									**90,480**	
Division 8- Doors, Windows, & Hardware										
	Doors and Frames	3	EA	1,800.00	5,400	450.00	1,350	2,250.00	6,750	
	Stainless Steel Hardware and Lockset	3	EA	600.00	1,800	150.00	450	750.00	2,250	
Subtotal-Division 8									**9,000**	
Division 9- Finishes										
	Paint Bollards	8	EA	35.00	280	35.00	280	70.00	560	
	Paint Piping, Valves & Equipment	1	LS	30,000.00	30,000	30,000.00	30,000	60,000.00	60,000	
Subtotal-Division 9									**60,560**	
Division 10- Specialities										
	Fire Extiguishers	2	EA	200.00	400	100.00	200	300.00	600	
	Signage	8	EA	50.00	400	20.00	160	70.00	560	
Subtotal-Division 10									**1,160**	
Division 11- Equipment										
	Removal of Mechanical Equipment	1	LS		-	36,000	36,000	36,000	36,000	Removal of Unused Incinerator Equipment
	Rotary Lobe Pumps (20 Hp)	1	EA	32,160	32,160	8,040	8,040	40,200	40,200	Vogelsang VX186-184Q (1/18/12)
	Grinders	1	EA	32,300	32,300	8,075	8,075	40,375	40,375	Vogelsang
	Strainpress (4 Hp)	4	EA	190,000	760,000	47,500	190,000	237,500	950,000	Huber SP4 (1/17/12)
	Centrifuge (100 Hp)	1	EA	410,000	410,000	102,500	102,500	512,500	512,500	Andritz D5LL (1/17/12)
	Odor Control System - 4000 cfm biofilter	1	EA	200,000	200,000	50,000	50,000	250,000	250,000	
	Polymer Feed System	1	EA	110,000	110,000	27,500	27,500	137,500	137,500	Acrison Series 500
	Polymer Feed Pumps and VFD (2 Hp)	2	EA	12,000	24,000	3,000	6,000	15,000	30,000	Milroy HPD C
	Ferric Costs	1	EA	474,783	474,783	118,696	118,696	593,478	593,478	Based on Synagro 90% Report
	Dust Collector	1	EA	12,000	12,000	3,000	3,000	15,000	15,000	
	Dryer	0	EA		-	-	-	-	-	
	Commissioning and Training	8	EA	500	4,000	4,500	36,000	5,000.00	40,000	
Subtotal-Division 11									**2,645,053**	
Division 12- Furnishings										
	Work Station	1	EA	1,800.00	1,800	900.00	900	2,700.00	2,700	
Subtotal-Division 12									**2,700**	
Division 13- Special Construction										
	Fire Alarm	1	EA	3,600.00	3,600	1,800.00	1,800	5,400.00	5,400	
Subtotal-Division 13									**5,400**	
Division 14- Conveying Systems										
	Cake Conveyors (25 Hp)	1	EA	120,000	120,000	30,000	30,000	150,000	150,000	Thomas Conveyor, 80 ft long (1/17/12)
	Strainpress Conveyors (10 HP)	2	EA	42,000	84,000	10,500	21,000	52,500	105,000	

CCH
Sand Island Biosolids Options
Option 4 Raw & Dig Exist Dryer

Date:February, 2011
Estimator: RBS
Checker: DS
Cost Index: ENR=9,000

Specification Division	Item Description	Quantity	Unit	Material Unit Cost	Total Material Cost	Installation Unit Cost	Total Installation Cost	Total Unit Cost	Total	Notes
Subtotal-Division 14									**255,000**	
Division 15- Mechanical										
	Protect Existing Piping and Valves	1	LS		-	24,000.00	24,000	24,000.00	24,000	
	Raw Sludge Pumping System								-	Cement Lined, Bituminous Coated DIP
	6" Plug Valve	8	EA	3,000.00	24,000	750.00	6,000	3,750.00	30,000	
	8" x 6" Reducers	8	EA	200.00	1,600	50.00	400	250.00	2,000	
	6" Tee	8	EA	300.00	2,400	75.00	600	375.00	3,000	
	6" 90 Ell	8	EA	150.00	1,200	37.50	300	187.50	1,500	
	8" 90 Ell	4	EA	250.00	1,000	62.50	250	312.50	1,250	
	6" Check Valve	-	EA	3,400.00	-	850.00	-	4,250.00	-	
	6" x 8" Reducing Elbow	-	EA	240.00	-	60.00	-	300.00	-	
	8" x 8" x 6" Tee	-	EA	400.00	-	100.00	-	500.00	-	
	8" Plug Valve	-	EA	5,000.00	-	1,250.00	-	6,250.00	-	
	8" DI Pipe	40	LF	108.00	4,320	27.00	1,080	135.00	5,400	
	6" DI Pipe	40	LF	77.00	3,080	19.25	770	96.25	3,850	
	Centrifuge Feed Pumping System								-	Cement Lined, Bituminous Coated DIP
	6" 90 Ell	4	EA	150.00	600	37.50	150	187.50	750	
	6" Tee	4	EA	300.00	1,200	75.00	300	375.00	1,500	
	6" x 8" Reducers	2	EA	200.00	400	50.00	100	250.00	500	
	8"x 8" x 6" Tee	1	EA	400.00	400	100.00	100	500.00	500	
	8" 90 Ell	4	EA	250.00	1,000	62.50	250	312.50	1,250	
	6" Plug Valve	4	EA	3,000.00	12,000	750.00	3,000	3,750.00	15,000	
	8" Plug Valve	2	EA	5,000.00	10,000	1,250.00	2,500	6,250.00	12,500	
	6" Check Valve	1	EA	3,400.00	3,400	850.00	850	4,250.00	4,250	
	8" DI Pipe	100	LF	108.00	10,800	27.00	2,700	135.00	13,500	
	6" DI Pipe	100	LF	77.00	7,700	19.25	1,925	96.25	9,625	
	Centrate Drainage System								-	Cement Lined, Bituminous Coated DIP
	8" 90 Ell	2	EA	250.00	500	62.50	125	312.50	625	
	8 x 6" 90 Ell	2	EA	240.00	480	60.00	120	300.00	600	
	8" Tee	2	EA	400.00	800	100.00	200	500.00	1,000	
	8" x 8" x 6" Tee	2	EA	400.00	800	100.00	200	500.00	1,000	
	8" x 6" Reducers	2	EA	200.00	400	50.00	100	250.00	500	
	8" DI Pipe	100	LF	108.00	10,800	27.00	2,700	135.00	13,500	
	6" DI Pipe	100	LF	77.00	7,700	19.25	1,925	96.25	9,625	
	Polymer Feed System									Schedule 80 PVC
	2" PVC Ball Valve	2	EA	200.00	400	50.00	100	250.00	500	
	1" PVC Ball Valve	4	EA	90.00	360	22.50	90	112.50	450	
	1" PVC Ball Check Valve	2	EA	120.00	240	30.00	60	150.00	300	
	2" Tee	2	EA	22.00	44	5.50	11	27.50	55	
	2" 90 Ell	4	EA	18.00	72	4.50	18	22.50	90	
	2"x 2" x 1" Tee	2	EA	18.00	36	4.50	9	22.50	45	
	1" Tee	2	EA	11.00	22	2.75	6	13.75	28	
	1" 90 Ell	8	EA	7.00	56	1.75	14	8.75	70	
	2" PVC Pipe	30	LF	11.00	330	2.75	83	13.75	413	
	1" PVC Pipe	100	LF	5.00	500	1.25	125	6.25	625	
	Odor Control System Ductwork									FRP
	Supply Fan 7.5 HP	1	EA	5,000.00	5,000	1,250.00	1,250	6,250.00	6,250	
	12" x 18" Fiberglass Reinforced Plastic Duct	80	LF	150.00	12,000	37.50	3,000	187.50	15,000	
	30" Fiberglass Reinforced Plastic Duct	60	LF	240.00	14,400	60.00	3,600	300.00	18,000	
	16" Fiberglass reinforced plastic duct	80	LF	128.00	10,240	32.00	2,560	160.00	12,800	

CCH
Sand Island Biosolids Options
Option 4 Raw & Dig Exist Dryer

Date:February, 2011
Estimator: RBS
Checker: DS
Cost Index: ENR=9,000

Specification Division	Item Description	Quantity	Unit	Material Unit Cost	Total Material Cost	Installation Unit Cost	Total Installation Cost	Total Unit Cost	Total	Notes
	Duct Support Trapeze Hanger	24	EA	80.00	1,920	20.00	480	100.00	2,400	
	Electric Room HVAC								-	FRP
	Package Roof Top AC Unit 3 Ton Capacity	1	EA	5,000.00	5,000	1,250.00	1,250	6,250.00	6,250	
	12" x 18" Fiberglass Reinforced Plastic Duct	32	LF	150.00	4,800	37.50	1,200	187.50	6,000	
	30" Fiberglass Reinforced Plastic Duct	12	LF	240.00	2,880	60.00	720	300.00	3,600	
	16" Fiberglass reinforced plastic duct	32	LF	128.00	4,096	32.00	1,024	160.00	5,120	
	Duct Support Trapeze Hanger	12	EA	80.00	960	20.00	240	100.00	1,200	
	Standard Details								-	
	Flexible Coupling	10	EA	800	8,000	200.00	2,000	1,000.00	10,000	
	Hose Bib	2	EA	160	320	40.00	80	200.00	400	
	Hose Rack	2	EA	50	100	12.50	25	62.50	125	
	Floor Drain	2	EA	240	480	60.00	120	300.00	600	
	Flushing Connection	3	EA	320	960	80.00	240	400.00	1,200	
	Pressure Gauge Assembly	12	EA	1,200	14,400	300.00	3,600	1,500.00	18,000	
	Seal Water Assembly	5	EA	3,200	16,000	800.00	4,000	4,000.00	20,000	
Subtotal-Division 15									**286,745**	
Division 16- Electrical										
	MCC	1	LS	110,000	110,000	27,500	27,500	137,500	137,500	NEMA 12 Industrial
	Power Wiring Rotary Lobe Pumps (20 Hp)	1	EA	3,200	3,200	800	800	4,000	4,000	
	Power Wiring Grinders	1	EA	3,200	3,200	800	800	4,000	4,000	
	Power Wiring Strainpress (4 Hp)	4	EA	19,000	76,000	4,750	19,000	23,750	95,000	
	Power Wiring Centrifuge (100 Hp)	1	EA	41,000	41,000	10,250	10,250	51,250	51,250	
	Power Wiring Odor Control System	1	EA	20,000	20,000	5,000	5,000	25,000	25,000	
	Power Wiring Polymer Feed System	1	EA	11,000	11,000	2,750	2,750	13,750	13,750	
	Power Wiring Polymer Feed Pumps & VFD	2	EA	1,200	2,400	300	600	1,500	3,000	
	Power Wiring Dryer	0	EA	284,000	-	71,000	-	355,000	-	
	Power Wiring Cake Conveyors (25 Hp)	1	EA	12,000	12,000	3,000	3,000	15,000	15,000	
	Power Wiring Strainpress Conveyors (10 HP)	2	EA	4,200	8,400	1,050	2,100	5,250	10,500	
	Control Wiring Rotary Lobe Pumps (20 Hp)	1	EA	3,200	3,200	800	800	4,000	4,000	
	Control Wiring Grinders	1	EA	3,200	3,200	800	800	4,000	4,000	
	Control Wiring Strainpress (4 Hp)	4	EA	19,000	76,000	4,750	19,000	23,750	95,000	
	Control Wiring Centrifuge (100 Hp)	1	EA	41,000	41,000	10,250	10,250	51,250	51,250	
	Control Wiring Odor Control System	1	EA	20,000	20,000	5,000	5,000	25,000	25,000	
	Control Wiring Polymer Feed System	1	EA	11,000	11,000	2,750	2,750	13,750	13,750	
	Control Wiring Polymer Feed Pumps & VFD	2	EA	1,200	2,400	300	600	1,500	3,000	
	Control Wiring Dryer	0	EA	284,000	-	71,000	-	355,000	-	
	Control Wiring Cake Conveyors (25 Hp)	1	EA	12,000	12,000	3,000	3,000	15,000	15,000	
	Control Wiring Strainpress Conveyors (10 HP)	2	EA	4,200	8,400	1,050	2,100	5,250	10,500	
	Disconnect Switches NEMA 4X SS	14	EA	1,600	22,400	400	5,600	2,000	28,000	NEMA 4X
	Temporary Power	1	LS	0	-	-	-	-	-	
	Demolition	1	LS	0	-	-	-	-	-	
	Fiber Optics	1	LS	5,000	5,000	1,250	1,250	6,250	6,250	
	Light Fixtures	12	EA	300	3,600	75	900	375.00	4,500	
	Emergency Lighting	2	EA	1,500	3,000	375	750	1,875.00	3,750	
	Receptacles	6	EA	100	600	25	150	125.00	750	
	Transformers	1	EA	3,500	3,500	875	875	4,375.00	4,375	
	Lighting Panels	1	EA	5,000	5,000	1,250	1,250	6,250.00	6,250	
	UPS Panel	1	EA	2,500	2,500	625	625	3,125.00	3,125	
	Commissioning and Training	1	EA	500	500	4,500	4,500	5,000.00	5,000	
Subtotal-Division 16									**642,500**	
Division 17- Instrumentation										
	RIO Panels	1	EA	110,000	110,000	27,500	27,500	137,500.00	137,500	NEMA 4X SS

CCH
Sand Island Biosolids Options
Option 4 Raw & Dig Exist Dryer

Date:February, 2011
Estimator: RBS
Checker: DS
Cost Index: ENR=9,000

Specification Division	Item Description	Quantity	Unit	Material Unit Cost	Total Material Cost	Installation Unit Cost	Total Installation Cost	Total Unit Cost	Total	Notes
	Ventilation Alarm and Control Panels	1	EA	3,000	3,000	750	750	3,750.00	3,750	
	Limit Switches	8	EA	600	4,800	150	1,200	750.00	6,000	
	Pressure Transmitters	6	EA	2,400	14,400	600	3,600	3,000.00	18,000	
	Float Switches	1	EA	1,200	1,200	300	300	1,500.00	1,500	
	Gas Monitoring System	1	EA	6,000	6,000	1,500	1,500	7,500.00	7,500	
	Ultrasonic Level Sensors	1	EA	4,000	4,000	1,000	1,000	5,000.00	5,000	
	Flow Meters	1	EA	9,000	9,000	2,250	2,250	11,250.00	11,250	
	Commissioning and Training	1	EA	500	500	4,500	4,500	5,000.00	5,000	
Subtotal-Division 17									**195,500**	
Subtotal-Divisions 1-17					3,358,489		1,845,230		5,203,718	
Division 0					1,507,111		745,005		2,252,116	
ESTIMATED CONSTRUCTION COST					**4,865,599**		**2,590,235**		**7,455,834**	
Project Services - Study Phase			20%		992,582		528,408		1,520,990	
TOTAL CURRENT ESTIMATED COST					**5,858,182**		**3,118,643**		**8,976,825**	
Escalation to Mid-Point of Construction			0.0%		-		-		-	
TOTAL ESTIMATED COST AT MIDPOINT					**5,858,182**		**3,118,643**		**8,977,000**	
NOTES:										
1. ENR INDEX = 9,000 (February, 2011)										

CCH
Sand Island Biosolids Options
Option 5 Raw & Dig New Dryer

Date:February, 2011
Estimator: RBS
Checker: DS
Cost Index: ENR=9,000

Option 5 - Dry Blended Digested and Undigested Sludge Using New Dryer

Specification Division	Item Description	Quantity	Unit	Material Unit Cost	Total Material Cost	Installation Unit Cost	Total Installation Cost	Total Unit Cost	Total	Notes
Division 0-General Conditions										
	Mobilization	1	LS		342,984		153,094	496,078	496,078	5% 0f Division 1-17 Subtotal
	Bonds	1	LS		205,791		91,856	297,647	297,647	3% 0f Division 1-17 Subtotal
	Insurance	1	LS		137,194		61,237	198,431	198,431	2.0% 0f Division 1-17 Subtotal
	Overhead and Profit	1	LS		1,714,922		765,469	2,480,391	2,480,391	25% 0f Division 1-17 Subtotal
	Sales tax	1	LS		308,686		-	308,686	308,686	4.5% of Division 1 - 17 Materials Subtotal
	Miscellaneous Project Expenses	1	LS		314,254		140,270	454,524	454,524	Approximately 5% 0f Division 1-17 Subtotal
Subtotal-Division 0					**3,023,831**		**1,211,926**		**4,235,757**	
Division 1- General Requirements										
	Field office	24	MO	-	-	1,500.00	36,000	1,500.00	36,000	
	Temporary storage	24	MO	-	-	1,000.00	24,000	1,000.00	24,000	
	Temporary power	24	MO	500.00	12,000	-	-	500.00	12,000	
	Phone and Fax	24	MO	250.00	6,000	-	-	250.00	6,000	
	Project Supervision	24	MO	-	-	33,000.00	792,000	33,000.00	792,000	
	Truck	24	MO	1,500.00	36,000	-	-	1,500.00	36,000	
	Computer	24	MO	290.00	6,960	-	-	290.00	6,960	
	EID/Tag Numbering Coordination	24	MO	-	-	400.00	9,600	400.00	9,600	
	Start up and Testing	1	LS	500.00	500	4,500.00	4,500	5,000.00	5,000	
	Punch list	1	LS	1,000.00	1,000	4,000.00	4,000	5,000.00	5,000	
Subtotal-Division 1									**932,560**	
Division 2- Sitework										
	Site preparation	1,600	SF	-	-	0.25	400	0.25	400	
	Excavation	40	CY	-	-	15.00	600	15.00	600	
	Demolition	1	LS	-	-	10,000.00	10,000	10,000.00	10,000	
	Gravel Base material	10	CY	15.00	150	30.00	300	45.00	450	
	Backfill and Compaction	40	CY	-	-	25.00	1,000	25.00	1,000	
	Dispose Excess Material	10	CY	-	-	95.00	950	95.00	950	
	Fine Grading	1,600	SF	-	-	0.60	960	0.60	960	
	Core Drill Sludge Holding Tank for Strainpress	4	EA	600.00	2,400	2,400.00	9,600	3,000.00	12,000	
	Bollards	8	EA	500.00	4,000	700.00	5,600	1,200.00	9,600	
Subtotal-Division 2									**35,960**	
Division 3- Concrete										
	Centrate Containment Curb and Wall Base	7	CY	120.00	840	780.00	5,460	900.00	6,300	Equipment pads
	Bar Reinforcing - 225 lb/cy	21,000	LB	1.00	21,000	1.00	21,000	2.00	42,000	
	Concrete Equipment Pads and Grouting	6	CY	120.00	720	780.00	4,680	900.00	5,400	
	Foam Pressure Injection Repair Concrete Deck	400	LF	10.00	4,000	20.00	8,000	30.00	12,000	
	Repair & Patch Existing Floor	1	LS	4,000.00	4,000	4,000.00	4,000	8,000.00	8,000	
	Concrete Fill Electric Room	7	CY	120.00	840	780.00	5,460	900.00	6,300	
	Reinforced Concrete Roof - 1,800 SF	70	CY	120.00	8,400	1,080.00	75,600	1,200.00	84,000	
	Concrete Pipe Supports	3	CY	120.00	360	780.00	2,340	900.00	2,700	
Subtotal-Division 3									**166,700**	
Division 4- Masonry										
	Centrifuge Building Masonry - 36 x 50 x 16 FT	3,200	SF	10.00	32,000	15.00	48,000	25.00	80,000	
Subtotal-Division 4									**80,000**	
Division 5 -Metals										
	Grating	420	SF	32.00	13,440	32.00	13,440	64.00	26,880	
	Railing	240	LF	40.00	9,600	40.00	9,600	80.00	19,200	

CCH
Sand Island Biosolids Options
Option 5 Raw & Dig New Dryer

Date:February, 2011
Estimator: RBS
Checker: DS
Cost Index: ENR=9,000

Specification Division	Item Description	Quantity	Unit	Material Unit Cost	Total Material Cost	Installation Unit Cost	Total Installation Cost	Total Unit Cost	Total	Notes
	Wall Bracket Supports	40	EA	160.00	6,400	160.00	6,400	320.00	12,800	
	Base Elbow Supports	32	EA	120.00	3,840	120.00	3,840	240.00	7,680	
	Pipe Hanger Supports	64	EA	100.00	6,400	100.00	6,400	200.00	12,800	
Subtotal-Division 5									**79,360**	
Division 6 -Wood and Plastics										
	(Not used)	-		-	-	-	-	-	-	
Subtotal-Division 6									**-**	
Division 7- Thermal & Moisture Protection										
	Scaffolding and Supports	2	EA	10,400.00	20,800	20,800.00	41,600	31,200.00	62,400	
	Aluminum Flashing	180	LF	4.00	720	2.00	360	6.00	1,080	
	Membrane Roofing	1,800	SF	10.00	18,000	5.00	9,000	15.00	27,000	
Subtotal-Division 7									**90,480**	
Division 8- Doors, Windows, & Hardware										
	Doors and Frames	3	EA	1,800.00	5,400	450.00	1,350	2,250.00	6,750	
	Stainless Steel Hardware and Lockset	3	EA	600.00	1,800	150.00	450	750.00	2,250	
Subtotal-Division 8									**9,000**	
Division 9- Finishes										
	Paint Bollards	8	EA	35.00	280	35.00	280	70.00	560	
	Paint Piping, Valves & Equipment	1	LS	30,000.00	30,000	30,000.00	30,000	60,000.00	60,000	
Subtotal-Division 9									**60,560**	
Division 10- Specialities										
	Fire Extiguishers	4	EA	200.00	800	100.00	400	300.00	1,200	
	Signage	16	EA	50.00	800	20.00	320	70.00	1,120	
Subtotal-Division 10									**2,320**	
Division 11- Equipment										
	Removal of Mechanical Equipment	1	LS		-	120,000	120,000	120,000	120,000	Removal of Dryer & Unused Equipment
	Rotary Lobe Pumps (20 Hp)	1	EA	32,160	32,160	8,040	8,040	40,200	40,200	Vogelsang VX186-184Q (1/18/12)
	Grinders	1	EA	32,300	32,300	8,075	8,075	40,375	40,375	Vogelsang
	Strainpress (4 Hp)	4	EA	190,000	760,000	47,500	190,000	237,500	950,000	Huber SP4 (1/17/12)
	Centrifuge (100 Hp)	1	EA	410,000	410,000	102,500	102,500	512,500	512,500	Andritz D5LL (1/17/12)
	Odor Control System - 4000 cfm biofilter	1	EA	200,000	200,000	50,000	50,000	250,000	250,000	
	Polymer Feed System	1	EA	110,000	110,000	27,500	27,500	137,500	137,500	Acrison Series 500
	Polymer Feed Pumps and VFD (2 Hp)	2	EA	12,000	24,000	3,000	6,000	15,000	30,000	Milroy HPD C
	Ferric Costs	1	EA	474,783	474,783	118,696	118,696	593,478	593,478	Based on Synagro 90% Report
	Dust Collector	1	EA	12,000	12,000	3,000	3,000	15,000	15,000	
	Dryer	1	EA	2,840,500	2,840,500	710,125	710,125	3,550,625	3,550,625	Therma-Flite, IC 10,000 (12/29/12)
	Commissioning and Training	9	EA	500	4,500	4,500	40,500	5,000.00	45,000	
Subtotal-Division 11									**6,284,678**	
Division12- Furnishings										
	Work Station	2	EA	1,800.00	3,600	900.00	1,800	2,700.00	5,400	
Subtotal-Division 12									**5,400**	
Division 13- Special Construction										
	Fire Alarm	2	EA	3,600.00	7,200	1,800.00	3,600	5,400.00	10,800	
Subtotal-Division 13									**10,800**	
Division 14- Conveying Systems										

CCH
Sand Island Biosolids Options
Option 5 Raw & Dig New Dryer

Date:February, 2011
Estimator: RBS
Checker: DS
Cost Index: ENR=9,000

Specification Division	Item Description	Quantity	Unit	Material Unit Cost	Total Material Cost	Installation Unit Cost	Total Installation Cost	Total Unit Cost	Total	Notes
	Cake Conveyors (25 Hp)	1	EA	120,000	120,000	30,000	30,000	150,000	150,000	Thomas Conveyor, 80 ft long (1/17/12)
	Strainpress Conveyors (10 HP)	2	EA	42,000	84,000	10,500	21,000	52,500	105,000	
Subtotal-Division 14									**255,000**	
Division 15- Mechanical										
	Protect Existing Piping and Valves	1	LS		-	24,000.00	24,000	24,000.00	24,000	
	Raw Sludge Pumping System								-	Cement Lined, Bituminous Coated DIP
	6" Plug Valve	8	EA	3,000.00	24,000	750.00	6,000	3,750.00	30,000	
	8" x 6" Reducers	8	EA	200.00	1,600	50.00	400	250.00	2,000	
	6" Tee	8	EA	300.00	2,400	75.00	600	375.00	3,000	
	6" 90 Ell	8	EA	150.00	1,200	37.50	300	187.50	1,500	
	8" 90 Ell	4	EA	250.00	1,000	62.50	250	312.50	1,250	
	6" Check Valve	-	EA	3,400.00	-	850.00	-	4,250.00	-	
	6" x 8" Reducing Elbow	-	EA	240.00	-	60.00	-	300.00	-	
	8" x 8" x 6" Tee	-	EA	400.00	-	100.00	-	500.00	-	
	8" Plug Valve	-	EA	5,000.00	-	1,250.00	-	6,250.00	-	
	8" DI Pipe	40	LF	108.00	4,320	27.00	1,080	135.00	5,400	
	6" DI Pipe	40	LF	77.00	3,080	19.25	770	96.25	3,850	
	Centrifuge Feed Pumping System								-	Cement Lined, Bituminous Coated DIP
	6" 90 Ell	4	EA	150.00	600	37.50	150	187.50	750	
	6" Tee	4	EA	300.00	1,200	75.00	300	375.00	1,500	
	6" x 8" Reducers	2	EA	200.00	400	50.00	100	250.00	500	
	8"x 8" x 6" Tee	1	EA	400.00	400	100.00	100	500.00	500	
	8" 90 Ell	4	EA	250.00	1,000	62.50	250	312.50	1,250	
	6" Plug Valve	4	EA	3,000.00	12,000	750.00	3,000	3,750.00	15,000	
	8" Plug Valve	2	EA	5,000.00	10,000	1,250.00	2,500	6,250.00	12,500	
	6" Check Valve	1	EA	3,400.00	3,400	850.00	850	4,250.00	4,250	
	8" DI Pipe	100	LF	108.00	10,800	27.00	2,700	135.00	13,500	
	6" DI Pipe	100	LF	77.00	7,700	19.25	1,925	96.25	9,625	
	Centrate Drainage System								-	Cement Lined, Bituminous Coated DIP
	8" 90 Ell	2	EA	250.00	500	62.50	125	312.50	625	
	8 x 6" 90 Ell	2	EA	240.00	480	60.00	120	300.00	600	
	8" Tee	2	EA	400.00	800	100.00	200	500.00	1,000	
	8" x 8" x 6" Tee	2	EA	400.00	800	100.00	200	500.00	1,000	
	8" x 6" Reducers	2	EA	200.00	400	50.00	100	250.00	500	
	8" DI Pipe	100	LF	108.00	10,800	27.00	2,700	135.00	13,500	
	6" DI Pipe	100	LF	77.00	7,700	19.25	1,925	96.25	9,625	
	Polymer Feed System									Schedule 80 PVC
	2" PVC Ball Valve	2	EA	200.00	400	50.00	100	250.00	500	
	1" PVC Ball Valve	4	EA	90.00	360	22.50	90	112.50	450	
	1" PVC Ball Check Valve	2	EA	120.00	240	30.00	60	150.00	300	
	2" Tee	2	EA	22.00	44	5.50	11	27.50	55	
	2" 90 Ell	4	EA	18.00	72	4.50	18	22.50	90	
	2"x 2" x 1" Tee	2	EA	18.00	36	4.50	9	22.50	45	
	1" Tee	2	EA	11.00	22	2.75	6	13.75	28	
	1" 90 Ell	8	EA	7.00	56	1.75	14	8.75	70	
	2" PVC Pipe	30	LF	11.00	330	2.75	83	13.75	413	
	1" PVC Pipe	100	LF	5.00	500	1.25	125	6.25	625	
	Odor Control System Ductwork									FRP

CCH
Sand Island Biosolids Options
Option 5 Raw & Dig New Dryer

Specification Division	Item Description	Quantity	Unit	Material Unit Cost	Total Material Cost	Installation Unit Cost	Total Installation Cost	Total Unit Cost	Total	Notes
	Supply Fan 7.5 HP	1	EA	5,000.00	5,000	1,250.00	1,250	6,250.00	6,250	
	12" x 18" Fiberglass Reinforced Plastic Duct	80	LF	150.00	12,000	37.50	3,000	187.50	15,000	
	30" Fiberglass Reinforced Plastic Duct	60	LF	240.00	14,400	60.00	3,600	300.00	18,000	
	16" Fiberglass reinforced plastic duct	80	LF	128.00	10,240	32.00	2,560	160.00	12,800	
	Duct Support Trapeze Hanger	24	EA	80.00	1,920	20.00	480	100.00	2,400	
	Electric Room HVAC								-	FRP
	Package Roof Top AC Unit 3 Ton Capacity	1	EA	5,000.00	5,000	1,250.00	1,250	6,250.00	6,250	
	12" x 18" Fiberglass Reinforced Plastic Duct	32	LF	150.00	4,800	37.50	1,200	187.50	6,000	
	30" Fiberglass Reinforced Plastic Duct	12	LF	240.00	2,880	60.00	720	300.00	3,600	
	16" Fiberglass reinforced plastic duct	32	LF	128.00	4,096	32.00	1,024	160.00	5,120	
	Duct Support Trapeze Hanger	12	EA	80.00	960	20.00	240	100.00	1,200	
	Standard Details								-	
	Flexible Coupling	10	EA	800	8,000	200.00	2,000	1,000.00	10,000	
	Hose Bib	2	EA	160	320	40.00	80	200.00	400	
	Hose Rack	2	EA	50	100	12.50	25	62.50	125	
	Floor Drain	2	EA	240	480	60.00	120	300.00	600	
	Flushing Connection	3	EA	320	960	80.00	240	400.00	1,200	
	Pressure Gauge Assembly	12	EA	1,200	14,400	300.00	3,600	1,500.00	18,000	
	Seal Water Assembly	5	EA	3,200	16,000	800.00	4,000	4,000.00	20,000	
Subtotal-Division 15									**286,745**	
Division 16- Electrical										
	MCC	1	LS	110,000	110,000	27,500	27,500	137,500	137,500	NEMA 12 Industrial
	Power Wiring Rotary Lobe Pumps (20 Hp)	1	EA	3,200	3,200	800	800	4,000	4,000	
	Power Wiring Grinders	1	EA	3,200	3,200	800	800	4,000	4,000	
	Power Wiring Strainpress (4 Hp)	4	EA	19,000	76,000	4,750	19,000	23,750	95,000	
	Power Wiring Centrifuge (100 Hp)	1	EA	41,000	41,000	10,250	10,250	51,250	51,250	
	Power Wiring Odor Control System	1	EA	28,000	28,000	7,000	7,000	35,000	35,000	
	Power Wiring Polymer Feed System	1	EA	11,000	11,000	2,750	2,750	13,750	13,750	
	Power Wiring Polymer Feed Pumps & VFD	2	EA	1,200	2,400	300	600	1,500	3,000	
	Power Wiring Dryer	1	EA	284,000	284,000	71,000	71,000	355,000	355,000	
	Power Wiring Cake Conveyors (25 Hp)	1	EA	12,000	12,000	3,000	3,000	15,000	15,000	
	Power Wiring Strainpress Conveyors (10 HP)	2	EA	4,200	8,400	1,050	2,100	5,250	10,500	
	Control Wiring Rotary Lobe Pumps (20 Hp)	1	EA	3,200	3,200	800	800	4,000	4,000	
	Control Wiring Grinders	1	EA	3,200	3,200	800	800	4,000	4,000	
	Control Wiring Strainpress (4 Hp)	4	EA	19,000	76,000	4,750	19,000	23,750	95,000	
	Control Wiring Centrifuge (100 Hp)	1	EA	41,000	41,000	10,250	10,250	51,250	51,250	
	Control Wiring Odor Control System	1	EA	28,000	28,000	7,000	7,000	35,000	35,000	
	Control Wiring Polymer Feed System	1	EA	11,000	11,000	2,750	2,750	13,750	13,750	
	Control Wiring Polymer Feed Pumps & VFD	2	EA	1,200	2,400	300	600	1,500	3,000	
	Control Wiring Dryer	1	EA	284,000	284,000	71,000	71,000	355,000	355,000	
	Control Wiring Cake Conveyors (25 Hp)	1	EA	12,000	12,000	3,000	3,000	15,000	15,000	
	Control Wiring Strainpress Conveyors (10 HP)	2	EA	4,200	8,400	1,050	2,100	5,250	10,500	
	Disconnect Switches NEMA 4X SS	15	EA	1,600	24,000	400	6,000	2,000	30,000	NEMA 4X
	Temporary Power	1	LS	10000	10000	10000	10000	20000	20,000	
	Demolition	1	LS	16000	16000	16000	16000	32000	32,000	
	Fiber Optics	1	LS	5,000	5,000	1,250	1,250	6,250	6,250	
	Light Fixtures	12	EA	300	3,600	75	900	375.00	4,500	
	Emergency Lighting	2	EA	1,500	3,000	375	750	1,875.00	3,750	
	Receptacles	6	EA	100	600	25	150	125.00	750	
	Transformers	1	EA	3,500	3,500	875	875	4,375.00	4,375	
	Lighting Panels	1	EA	5,000	5,000	1,250	1,250	6,250.00	6,250	

CCH
Sand Island Biosolids Options
Option 5 Raw & Dig New Dryer

Date:February, 2011
Estimator: RBS
Checker: DS
Cost Index: ENR=9,000

Specification Division	Item Description	Quantity	Unit	Material Unit Cost	Total Material Cost	Installation Unit Cost	Total Installation Cost	Total Unit Cost	Total	Notes
	UPS Panel	1	EA	2,500	2,500	625	625	3,125.00	3,125	
	Commissioning and Training	1	EA	500	500	4,500	4,500	5,000.00	5,000	
Subtotal-Division 16									**1,426,500**	
Division 17- Ins										
	RIO Panels	1	EA	110,000	110,000	27,500	27,500	137,500.00	137,500	NEMA 4X SS
	Ventilation Alarm and Control Panels	1	EA	3,000	3,000	750	750	3,750.00	3,750	
	Limit Switches	8	EA	600	4,800	150	1,200	750.00	6,000	
	Pressure Transmitters	6	EA	2,400	14,400	600	3,600	3,000.00	18,000	
	Float Switches	1	EA	1,200	1,200	300	300	1,500.00	1,500	
	Gas Monitoring System	1	EA	6,000	6,000	1,500	1,500	7,500.00	7,500	
	Ultrasonic Level Sensors	1	EA	4,000	4,000	1,000	1,000	5,000.00	5,000	
	Flow Meters	1	EA	9,000	9,000	2,250	2,250	11,250.00	11,250	
	Commissioning and Training	1	EA	500	500	4,500	4,500	5,000.00	5,000	
Subtotal-Division 17									**195,500**	
Subtotal-Divisions 1-17					6,859,689		3,061,875		9,921,563	
Division 0					3,023,831		1,211,926		4,235,757	
ESTIMATED CONSTRUCTION COST					**9,883,520**		**4,273,801**		**14,157,320**	
Project Services - Study Phase			20%		2,016,238		871,855		2,888,093	
TOTAL CURRENT ESTIMATED COST					**11,899,758**		**5,145,656**		**17,045,414**	
Escalation to Mid-Point of Construction			0.0%		-		-		-	
TOTAL ESTIMATED COST AT MIDPOINT					**11,899,758**		**5,145,656**		**17,045,000**	
NOTES:										
1. ENR INDEX = 9,000 (February, 2011)										

CCH
Sand Island Biosolids Options
Option 6 Raw Cake New Dryer

Date:February, 2011
Estimator: RBS
Checker: DS
Cost Index: ENR=9,000

Option 6 - Dry Undigested Sludge Using New Dryer

Specification Division	Item Description	Quantity	Unit	Material Unit Cost	Total Material Cost	Installation Unit Cost	Total Installation Cost	Total Unit Cost	Total	Notes
Division 0-General Conditions										
	Mobilization	1	LS		466,045		183,404	649,449	649,449	5% 0f Division 1-17 Subtotal
	Bonds	1	LS		279,627		110,042	389,670	389,670	3% 0f Division 1-17 Subtotal
	Insurance	1	LS		186,418		73,362	259,780	259,780	2.0% 0f Division 1-17 Subtotal
	Overhead and Profit	1	LS		2,330,227		917,020	3,247,247	3,247,247	25% 0f Division 1-17 Subtotal
	Sales tax	1	LS		419,441		-	419,441	419,441	4.5% of Division 1 - 17 Materials Subtotal
	Miscellaneous Project Expenses	1	LS		454,408		178,824	633,232	633,232	Approximately 5% 0f Division 1-17 Subtotal
Subtotal-Division 0					**4,136,167**		**1,462,652**		**5,598,819**	
Division 1- General Requirements										
	Field office	24	MO	-	-	1,500.00	36,000	1,500.00	36,000	
	Temporary storage	24	MO	-	-	1,000.00	24,000	1,000.00	24,000	
	Temporary power	24	MO	500.00	12,000	-	-	500.00	12,000	
	Phone and Fax	24	MO	250.00	6,000	-	-	250.00	6,000	
	Project Supervision	24	MO	-	-	33,000.00	792,000	33,000.00	792,000	
	Truck	24	MO	1,500.00	36,000	-	-	1,500.00	36,000	
	Computer	24	MO	290.00	6,960	-	-	290.00	6,960	
	EID/Tag Numbering Coordination	24	MO	-	-	400.00	9,600	400.00	9,600	
	Start up and Testing	1	LS	500.00	500	4,500.00	4,500	5,000.00	5,000	
	Punch list	1	LS	1,000.00	1,000	4,000.00	4,000	5,000.00	5,000	
Subtotal-Division 1									**932,560**	
Division 2- Sitework										
	Site preparation	1,600	SF	-	-	0.25	400	0.25	400	
	Excavation	40	CY	-	-	15.00	600	15.00	600	
	Demolition	1	LS	-	-	10,000.00	10,000	10,000.00	10,000	
	Gravel Base material	10	CY	15.00	150	30.00	300	45.00	450	
	Backfill and Compaction	40	CY	-	-	25.00	1,000	25.00	1,000	
	Dispose Excess Material	10	CY	-	-	95.00	950	95.00	950	
	Fine Grading	1,600	SF	-	-	0.60	960	0.60	960	
	Core Drill Sludge Holding Tank for Strainpress	4	EA	600.00	2,400	2,400.00	9,600	3,000.00	12,000	
	Bollards	8	EA	500.00	4,000	700.00	5,600	1,200.00	9,600	
Subtotal-Division 2									**35,960**	
Division 3- Concrete										
	Centrate Containment Curb and Wall Base	7	CY	120.00	840	780.00	5,460	900.00	6,300	Equipment pads
	Bar Reinforcing - 225 lb/cy	21,000	LB	1.00	21,000	1.00	21,000	2.00	42,000	
	Concrete Equipment Pads and Grouting	6	CY	120.00	720	780.00	4,680	900.00	5,400	
	Foam Pressure Injection Repair Concrete Deck	400	LF	10.00	4,000	20.00	8,000	30.00	12,000	
	Repair & Patch Existing Floor	1	LS	4,000.00	4,000	4,000.00	4,000	8,000.00	8,000	
	Concrete Fill Electric Room	7	CY	120.00	840	780.00	5,460	900.00	6,300	
	Reinforced Concrete Roof - 1,800 SF	70	CY	120.00	8,400	1,080.00	75,600	1,200.00	84,000	
	Concrete Pipe Supports	3	CY	120.00	360	780.00	2,340	900.00	2,700	
Subtotal-Division 3									**166,700**	
Division 4- Masonry										
	Centrifuge Building Masonry - 36 x 50 x 16 FT	3,200	SF	10.00	32,000	15.00	48,000	25.00	80,000	
Subtotal-Division 4									**80,000**	
Division 5 -Metals										
	Grating	800	SF	32.00	25,600	32.00	25,600	64.00	51,200	
	Railing	400	LF	40.00	16,000	40.00	16,000	80.00	32,000	
	Wall Bracket Supports	20	EA	160.00	3,200	160.00	3,200	320.00	6,400	

CCH
Sand Island Biosolids Options
Option 6 Raw Cake New Dryer

Date:February, 2011
Estimator: RBS
Checker: DS
Cost Index: ENR=9,000

Specification Division	Item Description	Quantity	Unit	Material Unit Cost	Total Material Cost	Installation Unit Cost	Total Installation Cost	Total Unit Cost	Total	Notes
	Base Elbow Supports	20	EA	120.00	2,400	120.00	2,400	240.00	4,800	
	Pipe Hanger Supports	50	EA	100.00	5,000	100.00	5,000	200.00	10,000	
Subtotal-Division 5									**104,400**	
Division 6 -Wood and Plastics										
	(Not used)	-		-	-	-	-	-	-	
Subtotal-Division 6									**-**	
Division 7- Thermal & Moisture Protection										
	Scaffolding and Supports	2	EA	10,400.00	20,800	20,800.00	41,600	31,200.00	62,400	
	Aluminum Flashing	180	LF	4.00	720	2.00	360	6.00	1,080	
	Membrane Roofing	1,800	SF	10.00	18,000	5.00	9,000	15.00	27,000	
Subtotal-Division 7									**90,480**	
Division 8- Doors, Windows, & Hardware										
	Doors and Frames	3	EA	1,800.00	5,400	450.00	1,350	2,250.00	6,750	
	Stainless Steel Hardware and Lockset	3	EA	600.00	1,800	150.00	450	750.00	2,250	
Subtotal-Division 8									**9,000**	
Division 9- Finishes										
	Paint Bollards	8	EA	35.00	280	35.00	280	70.00	560	
	Paint Piping, Valves & Equipment	1	LS	30,000.00	30,000	30,000.00	30,000	60,000.00	60,000	
Subtotal-Division 9									**60,560**	
Division 10- Specialities										
	Fire Extiguishers	6	EA	200.00	1,200	100.00	600	300.00	1,800	
	Signage	24	EA	50.00	1,200	20.00	480	70.00	1,680	
Subtotal-Division 10									**3,480**	
Division 11- Equipment										
	Removal of Mechanical Equipment	1	LS		-	100,000	100,000	100,000	100,000	Removal of Dryer & Unused Equipment
	Rotary Lobe Pumps (20 Hp)	1	EA	32,160	32,160	8,040	8,040	40,200	40,200	Vogelsang VX186-184Q (1/18/12)
	Grinders	1	EA	32,300	32,300	8,075	8,075	40,375	40,375	Vogelsang
	Strainpress (4 Hp)	4	EA	190,000	760,000	47,500	190,000	237,500	950,000	Huber SP4 (1/17/12)
	Centrifuge (100 Hp)	1	EA	410,000	410,000	102,500	102,500	512,500	512,500	Andritz D5LL (1/17/12)
	Odor Control System - 4000 cfm biofilter	1	EA	200,000	200,000	50,000	50,000	250,000	250,000	
	Polymer Feed System	1	EA	110,000	110,000	27,500	27,500	137,500	137,500	Acrison Series 500
	Polymer Feed Pumps and VFD (2 Hp)	2	EA	12,000	24,000	3,000	6,000	15,000	30,000	Milroy HPD C
	Ferric Costs	1	EA	474,783	474,783	118,696	118,696	593,478	593,478	Based on Synagro 90% Report
	Dust Collector	1	EA	12,000	12,000	3,000	3,000	15,000	15,000	
	Dryer	2	EA	2,440,700	4,881,400	610,175	1,220,350	3,050,875	6,101,750	Therma-Flite, 2 x IC 7,000 (12/29/12)
	Commissioning and Training	9	EA	500	4,500	4,500	40,500	5,000.00	45,000	
Subtotal-Division 11									**8,815,803**	
Division12- Furnishings										
	Work Station	3	EA	1,800.00	5,400	900.00	2,700	2,700.00	8,100	
Subtotal-Division 12									**8,100**	
Division 13- Special Construction										
	Fire Alarm	3	EA	3,600.00	10,800	1,800.00	5,400	5,400.00	16,200	
Subtotal-Division 13									**16,200**	
Division 14- Conveying Systems										
	Cake Conveyors (25 Hp)	1	EA	$120,000.00	120,000	30,000	30,000	150,000	150,000	Thomas Conveyor, 80 ft long (1/17/12)
	Strainpress Conveyors (10 HP)	2	EA	42,000	84,000	10,500	21,000	52,500	105,000	

CCH
Sand Island Biosolids Options
Option 6 Raw Cake New Dryer

Date:February, 2011
Estimator: RBS
Checker: DS
Cost Index: ENR=9,000

Specification Division	Item Description	Quantity	Unit	Material Unit Cost	Total Material Cost	Installation Unit Cost	Total Installation Cost	Total Unit Cost	Total	Notes
Subtotal-Division 14									**255,000**	
Division 15- Mechanical										
	Protect Existing Piping and Valves	1	LS		-	24,000.00	24,000	24,000.00	24,000	
	Raw Sludge Pumping System								-	Cement Lined, Bituminous Coated DIP
	6" Plug Valve	8	EA	3,000.00	24,000	750.00	6,000	3,750.00	30,000	
	8" x 6" Reducers	8	EA	200.00	1,600	50.00	400	250.00	2,000	
	6" Tee	8	EA	300.00	2,400	75.00	600	375.00	3,000	
	6" 90 Ell	8	EA	150.00	1,200	37.50	300	187.50	1,500	
	8" 90 Ell	4	EA	250.00	1,000	62.50	250	312.50	1,250	
	6" Check Valve	-	EA	3,400.00	-	850.00	-	4,250.00	-	
	6" x 8" Reducing Elbow	-	EA	240.00	-	60.00	-	300.00	-	
	8" x 8" x 6" Tee	-	EA	400.00	-	100.00	-	500.00	-	
	8" Plug Valve	-	EA	5,000.00	-	1,250.00	-	6,250.00	-	
	8" DI Pipe	40	LF	108.00	4,320	27.00	1,080	135.00	5,400	
	6" DI Pipe	40	LF	77.00	3,080	19.25	770	96.25	3,850	
	Centrifuge Feed Pumping System								-	Cement Lined, Bituminous Coated DIP
	6" 90 Ell	4	EA	150.00	600	37.50	150	187.50	750	
	6" Tee	4	EA	300.00	1,200	75.00	300	375.00	1,500	
	6" x 8" Reducers	2	EA	200.00	400	50.00	100	250.00	500	
	8"x 8" x 6" Tee	1	EA	400.00	400	100.00	100	500.00	500	
	8" 90 Ell	4	EA	250.00	1,000	62.50	250	312.50	1,250	
	6" Plug Valve	4	EA	3,000.00	12,000	750.00	3,000	3,750.00	15,000	
	8" Plug Valve	2	EA	5,000.00	10,000	1,250.00	2,500	6,250.00	12,500	
	6" Check Valve	1	EA	3,400.00	3,400	850.00	850	4,250.00	4,250	
	8" DI Pipe	100	LF	108.00	10,800	27.00	2,700	135.00	13,500	
	6" DI Pipe	100	LF	77.00	7,700	19.25	1,925	96.25	9,625	
	Centrate Drainage System								-	Cement Lined, Bituminous Coated DIP
	8" 90 Ell	2	EA	250.00	500	62.50	125	312.50	625	
	8 x 6" 90 Ell	2	EA	240.00	480	60.00	120	300.00	600	
	8" Tee	2	EA	400.00	800	100.00	200	500.00	1,000	
	8" x 8" x 6" Tee	2	EA	400.00	800	100.00	200	500.00	1,000	
	8" x 6" Reducers	2	EA	200.00	400	50.00	100	250.00	500	
	8" DI Pipe	100	LF	108.00	10,800	27.00	2,700	135.00	13,500	
	6" DI Pipe	100	LF	77.00	7,700	19.25	1,925	96.25	9,625	
	Polymer Feed System									Schedule 80 PVC
	2" PVC Ball Valve	2	EA	200.00	400	50.00	100	250.00	500	
	1" PVC Ball Valve	4	EA	90.00	360	22.50	90	112.50	450	
	1" PVC Ball Check Valve	2	EA	120.00	240	30.00	60	150.00	300	
	2" Tee	2	EA	22.00	44	5.50	11	27.50	55	
	2" 90 Ell	4	EA	18.00	72	4.50	18	22.50	90	
	2"x 2" x 1" Tee	2	EA	18.00	36	4.50	9	22.50	45	
	1" Tee	2	EA	11.00	22	2.75	6	13.75	28	
	1" 90 Ell	8	EA	7.00	56	1.75	14	8.75	70	
	2" PVC Pipe	30	LF	11.00	330	2.75	83	13.75	413	
	1" PVC Pipe	100	LF	5.00	500	1.25	125	6.25	625	
	Odor Control System Ductwork									FRP
	Supply Fan 7.5 HP	1	EA	5,000.00	5,000	1,250.00	1,250	6,250.00	6,250	
	12" x 18" Fiberglass Reinforced Plastic Duct	80	LF	150.00	12,000	37.50	3,000	187.50	15,000	
	30" Fiberglass Reinforced Plastic Duct	60	LF	240.00	14,400	60.00	3,600	300.00	18,000	

CCH
Sand Island Biosolids Options
Option 6 Raw Cake New Dryer

Specification Division	Item Description	Quantity	Unit	Material Unit Cost	Total Material Cost	Installation Unit Cost	Total Installation Cost	Total Unit Cost	Total	Notes
	16" Fiberglass reinforced plastic duct	80	LF	128.00	10,240	32.00	2,560	160.00	12,800	
	Duct Support Trapeze Hanger	24	EA	80.00	1,920	20.00	480	100.00	2,400	
	Electric Room HVAC								-	FRP
	Package Roof Top AC Unit 3 Ton Capacity	1	EA	5,000.00	5,000	1,250.00	1,250	6,250.00	6,250	
	12" x 18" Fiberglass Reinforced Plastic Duct	32	LF	150.00	4,800	37.50	1,200	187.50	6,000	
	30" Fiberglass Reinforced Plastic Duct	12	LF	240.00	2,880	60.00	720	300.00	3,600	
	16" Fiberglass reinforced plastic duct	32	LF	128.00	4,096	32.00	1,024	160.00	5,120	
	Duct Support Trapeze Hanger	12	EA	80.00	960	20.00	240	100.00	1,200	
	Standard Details								-	
	Flexible Coupling	10	EA	800	8,000	200.00	2,000	1,000.00	10,000	
	Hose Bib	2	EA	160	320	40.00	80	200.00	400	
	Hose Rack	2	EA	50	100	12.50	25	62.50	125	
	Floor Drain	2	EA	240	480	60.00	120	300.00	600	
	Flushing Connection	3	EA	320	960	80.00	240	400.00	1,200	
	Pressure Gauge Assembly	12	EA	1,200	14,400	300.00	3,600	1,500.00	18,000	
	Seal Water Assembly	5	EA	3,200	16,000	800.00	4,000	4,000.00	20,000	
Subtotal-Division 15									**286,745**	
Division 16- Electrical										
	MCC	1	LS	110,000	110,000	27,500	27,500	137,500	137,500	NEMA 12 Industrial
	Power Wiring Rotary Lobe Pumps (20 Hp)	1	EA	3,200	3,200	800	800	4,000	4,000	
	Power Wiring Grinders	1	EA	3,200	3,200	800	800	4,000	4,000	
	Power Wiring Strainpress (4 Hp)	4	EA	19,000	76,000	4,750	19,000	23,750	95,000	
	Power Wiring Centrifuge (100 Hp)	1	EA	41,000	41,000	10,250	10,250	51,250	51,250	
	Power Wiring Odor Control System	1	EA	24,000	24,000	6,000	6,000	30,000	30,000	
	Power Wiring Polymer Feed System	1	EA	11,000	11,000	2,750	2,750	13,750	13,750	
	Power Wiring Polymer Feed Pumps & VFD	2	EA	1,200	2,400	300	600	1,500	3,000	
	Power Wiring Dryer	2	EA	244,000	488,000	61,000	122,000	305,000	610,000	
	Power Wiring Cake Conveyors (25 Hp)	1	EA	12,000	12,000	3,000	3,000	15,000	15,000	
	Power Wiring Strainpress Conveyors (10 HP)	2	EA	4,200	8,400	1,050	2,100	5,250	10,500	
	Control Wiring Rotary Lobe Pumps (20 Hp)	1	EA	3,200	3,200	800	800	4,000	4,000	
	Control Wiring Grinders	1	EA	3,200	3,200	800	800	4,000	4,000	
	Control Wiring Strainpress (4 Hp)	4	EA	19,000	76,000	4,750	19,000	23,750	95,000	
	Control Wiring Centrifuge (100 Hp)	1	EA	41,000	41,000	10,250	10,250	51,250	51,250	
	Control Wiring Odor Control System	1	EA	24,000	24,000	6,000	6,000	30,000	30,000	
	Control Wiring Polymer Feed System	1	EA	11,000	11,000	2,750	2,750	13,750	13,750	
	Control Wiring Polymer Feed Pumps & VFD	2	EA	1,200	2,400	300	600	1,500	3,000	
	Control Wiring Dryer	2	EA	244,000	488,000	61,000	122,000	305,000	610,000	
	Control Wiring Cake Conveyors (25 Hp)	1	EA	12,000	12,000	3,000	3,000	15,000	15,000	
	Control Wiring Strainpress Conveyors (10 HP)	2	EA	4,200	8,400	1,050	2,100	5,250	10,500	
	Disconnect Switches NEMA 4X SS	16	EA	1,600	25,600	400	6,400	2,000	32,000	NEMA 4X
	Temporary Power	1	LS	10000	10000	10000	10000	20000	20,000	
	Demolition	1	LS	16000	16000	16000	16000	32000	32,000	
	Fiber Optics	1	LS	5,000	5,000	1,250	1,250	6,250	6,250	
	Light Fixtures	12	EA	300	3,600	75	900	375.00	4,500	
	Emergency Lighting	2	EA	1,500	3,000	375	750	1,875.00	3,750	
	Receptacles	6	EA	100	600	25	150	125.00	750	
	Transformers	1	EA	3,500	3,500	875	875	4,375.00	4,375	
	Lighting Panels	1	EA	5,000	5,000	1,250	1,250	6,250.00	6,250	
	UPS Panel	1	EA	2,500	2,500	625	625	3,125.00	3,125	
	Commissioning and Training	1	EA	500	500	4,500	4,500	5,000.00	5,000	
Subtotal-Division 16									**1,928,500**	

CCH
Sand Island Biosolids Options
Option 6 Raw Cake New Dryer

Date:February, 2011
Estimator: RBS
Checker: DS
Cost Index: ENR=9,000

Specification Division	Item Description	Quantity	Unit	Material Unit Cost	Total Material Cost	Installation Unit Cost	Total Installation Cost	Total Unit Cost	Total	Notes
Division 17- Instrumentation										
	RIO Panels	1	EA	110,000	110,000	27,500	27,500	137,500.00	137,500	NEMA 4X SS
	Ventilation Alarm and Control Panels	1	EA	3,000	3,000	750	750	3,750.00	3,750	
	Limit Switches	8	EA	600	4,800	150	1,200	750.00	6,000	
	Pressure Transmitters	6	EA	2,400	14,400	600	3,600	3,000.00	18,000	
	Float Switches	1	EA	1,200	1,200	300	300	1,500.00	1,500	
	Gas Monitoring System	1	EA	6,000	6,000	1,500	1,500	7,500.00	7,500	
	Ultrasonic Level Sensors	1	EA	4,000	4,000	1,000	1,000	5,000.00	5,000	
	Flow Meters	1	EA	9,000	9,000	2,250	2,250	11,250.00	11,250	
	Commissioning and Training	1	EA	500	500	4,500	4,500	5,000.00	5,000	
Subtotal-Division 17									**195,500**	
Subtotal-Divisions 1-17					9,320,909		3,668,080		12,988,988	
Division 0					4,136,167		1,462,652		5,598,819	
ESTIMATED CONSTRUCTION COST					**13,457,075**		**5,130,732**		**18,587,807**	
Project Services - Study Phase			20%		2,745,243		1,046,669		3,791,913	
TOTAL CURRENT ESTIMATED COST					**16,202,319**		**6,177,401**		**22,379,720**	
Escalation to Mid-Point of Construction			0.0%		-		-		-	
TOTAL ESTIMATED COST AT MIDPOINT					**16,202,319**		**6,177,401**		**22,380,000**	
NOTES:										
1. ENR INDEX = 9,000 (February, 2011)										

CCH
Sand Island Biosolids Options
Option 7

Date:February, 2011
Estimator: RBS
Checker: DS
Cost Index: ENR=9,000

Option 7 - Dry All Digested Sludge Using New Dryer

Specification Division	Item Description	Quantity	Unit	Material Unit Cost	Total Material Cost	Installation Unit Cost	Total Installation Cost	Total Unit Cost	Total	Notes
Division 0-General Conditions										
	Mobilization	1	LS		207,079		116,405	323,484	323,484	5% 0f Division 1-17 Subtotal
	Bonds	1	LS		124,248		69,843	194,091	194,091	3% 0f Division 1-17 Subtotal
	Insurance	1	LS		82,832		46,562	129,394	129,394	2.0% 0f Division 1-17 Subtotal
	Overhead and Profit	1	LS		1,035,397		582,025	1,617,422	1,617,422	25% 0f Division 1-17 Subtotal
	Sales tax	1	LS		186,371		-	186,371	186,371	4.5% of Division 1 - 17 Materials Subtotal
	Miscellaneous Project Expenses	1	LS		189,733		106,654	296,388	296,388	Approximately 5% 0f Division 1-17 Subtotal
Subtotal-Division 0					**1,825,661**		**921,489**		**2,747,150**	
Division 1- General Requirements										
	Field office	24	MO	-	-	1,500.00	36,000	1,500.00	36,000	
	Temporary storage	24	MO	-	-	1,000.00	24,000	1,000.00	24,000	
	Temporary power	24	MO	500.00	12,000	-	-	500.00	12,000	
	Phone and Fax	24	MO	250.00	6,000	-	-	250.00	6,000	
	Project Supervision	24	MO	-	-	33,000.00	792,000	33,000.00	792,000	
	Truck	24	MO	1,500.00	36,000	-	-	1,500.00	36,000	
	Computer	24	MO	290.00	6,960	-	-	290.00	6,960	
	EID/Tag Numbering Coordination	24	MO	-	-	400.00	9,600	400.00	9,600	
	Start up and Testing	1	LS	500.00	500	4,500.00	4,500	5,000.00	5,000	
	Punch list	1	LS	1,000.00	1,000	4,000.00	4,000	5,000.00	5,000	
Subtotal-Division 1									**932,560**	
Division 2- Sitework										
	Site preparation	1,600	SF	-	-	0.25	400	0.25	400	
	Excavation	40	CY	-	-	15.00	600	15.00	600	
	Demolition	1	LS	-	-	10,000.00	10,000	10,000.00	10,000	
	Gravel Base material	10	CY	15.00	150	30.00	300	45.00	450	
	Backfill and Compaction	40	CY	-	-	25.00	1,000	25.00	1,000	
	Dispose Excess Material	10	CY	-	-	95.00	950	95.00	950	
	Fine Grading	1,600	SF	-	-	0.60	960	0.60	960	
	Core Drill Sludge Holding Tank for Strainpress	-	EA	600.00	-	2,400.00	-	3,000.00	-	
	Bollards	8	EA	500.00	4,000	700.00	5,600	1,200.00	9,600	
Subtotal-Division 2									**23,960**	
Division 3- Concrete										
	Centrate Containment Curb and Wall Base	-	CY	120.00	-	780.00	-	900.00	-	Equipment pads
	Bar Reinforcing - 225 lb/cy	21,000	LB	1.00	21,000	1.00	21,000	2.00	42,000	
	Concrete Equipment Pads and Grouting	6	CY	120.00	720	780.00	4,680	900.00	5,400	
	Foam Pressure Injection Repair Concrete Deck	400	LF	10.00	4,000	20.00	8,000	30.00	12,000	
	Repair & Patch Existing Floor	1	LS	4,000.00	4,000	4,000.00	4,000	8,000.00	8,000	
	Concrete Fill Electric Room	7	CY	120.00	840	780.00	5,460	900.00	6,300	
	Reinforced Concrete Roof - 1,800 SF	70	CY	120.00	8,400	1,080.00	75,600	1,200.00	84,000	
	Concrete Pipe Supports	3	CY	120.00	360	780.00	2,340	900.00	2,700	
Subtotal-Division 3									**160,400**	
Division 4- Masonry										
	Centrifuge Building Masonry - 36 x 50 x 16 FT	-	SF	10.00	-	15.00	-	25.00	-	
Subtotal-Division 4									**-**	
Division 5 -Metals										
	Grating	420	SF	32.00	13,440	32.00	13,440	64.00	26,880	
	Railing	240	LF	40.00	9,600	40.00	9,600	80.00	19,200	
	Wall Bracket Supports	40	EA	160.00	6,400	160.00	6,400	320.00	12,800	

CCH
Sand Island Biosolids Options
Option 7

Date:February, 2011
Estimator: RBS
Checker: DS
Cost Index: ENR=9,000

Specification Division	Item Description	Quantity	Unit	Material Unit Cost	Total Material Cost	Installation Unit Cost	Total Installation Cost	Total Unit Cost	Total	Notes
	Base Elbow Supports	32	EA	120.00	3,840	120.00	3,840	240.00	7,680	
	Pipe Hanger Supports	64	EA	100.00	6,400	100.00	6,400	200.00	12,800	
Subtotal-Division 5									**79,360**	
Division 6 -Wood and Plastics										
	(Not used)	-		-	-	-	-	-	-	
Subtotal-Division 6									**-**	
Division 7- Thermal & Moisture Protection										
	Scaffolding and Supports	2	EA	10,400.00	20,800	20,800.00	41,600	31,200.00	62,400	
	Aluminum Flashing	180	LF	4.00	720	2.00	360	6.00	1,080	
	Membrane Roofing	1,800	SF	10.00	18,000	5.00	9,000	15.00	27,000	
Subtotal-Division 7									**90,480**	
Division 8- Doors, Windows, & Hardware										
	Doors and Frames	3	EA	1,800.00	5,400	450.00	1,350	2,250.00	6,750	
	Stainless Steel Hardware and Lockset	3	EA	600.00	1,800	150.00	450	750.00	2,250	
Subtotal-Division 8									**9,000**	
Division 9- Finishes										
	Paint Bollards	8	EA	35.00	280	35.00	280	70.00	560	
	Paint Piping, Valves & Equipment	1	LS	30,000.00	30,000	30,000.00	30,000	60,000.00	60,000	
Subtotal-Division 9									**60,560**	
Division 10- Specialities										
	Fire Extiguishers	4	EA	200.00	800	100.00	400	300.00	1,200	
	Signage	16	EA	50.00	800	20.00	320	70.00	1,120	
Subtotal-Division 10									**2,320**	
Division 11- Equipment										
	Removal of Mechanical Equipment	1	LS		-	120,000	120,000	120,000	120,000	Removal of Dryer & Unused Equipment
	Rotary Lobe Pumps (20 Hp)	0	EA	32,160	-	8,040	-	40,200	-	Vogelsang VX186-184Q (1/18/12)
	Grinders	0	EA	32,300	-	8,075	-	40,375	-	Vogelsang
	Strainpress (4 Hp)	0	EA	190,000	-	47,500	-	237,500	-	Huber SP4 (1/17/12)
	Centrifuge (100 Hp)	0	EA	410,000	-	102,500	-	512,500	-	Andritz D5LL (1/17/12)
	Odor Control System - 4000 cfm biofilter	0	EA	200,000	-	50,000	-	250,000	-	
	Polymer Feed System	0	EA	110,000	-	27,500	-	137,500	-	Acrison Series 500
	Polymer Feed Pumps and VFD (2 Hp)	0	EA	12,000	-	3,000	-	15,000	-	Milroy HPD C
	Ferric Costs	1	EA	474,783	474,783	118,696	118,696	593,478	593,478	Based on Synagro 90% Report
	Dust Collector	1	EA	12,000	12,000	3,000	3,000	15,000	15,000	
	Dryer	1	EA	2,440,700	2,440,700	610,175	610,175	3,050,875	3,050,875	Therma-Flite, IC 10,000 (12/29/12)
	Commissioning and Training	9	EA	500	4,500	4,500	40,500	5,000.00	45,000	
Subtotal-Division 11									**3,824,353**	
Division12- Furnishings										
	Work Station	2	EA	1,800.00	3,600	900.00	1,800	2,700.00	5,400	
Subtotal-Division 12									**5,400**	
Division 13- Special Construction										
	Fire Alarm	2	EA	3,600.00	7,200	1,800.00	3,600	5,400.00	10,800	
Subtotal-Division 13									**10,800**	
Division 14- Conveying Systems										
	Cake Conveyors (25 Hp)	0	EA	120,000	-	30,000	-	150,000	-	Thomas Conveyor, 80 ft long (1/17/12)
	Strainpress Conveyors (10 HP)	0	EA	42,000	-	10,500	-	52,500	-	

CCH
Sand Island Biosolids Options
Option 7

Date:February, 2011
Estimator: RBS
Checker: DS
Cost Index: ENR=9,000

Specification Division	Item Description	Quantity	Unit	Material Unit Cost	Total Material Cost	Installation Unit Cost	Total Installation Cost	Total Unit Cost	Total	Notes
Subtotal-Division 14									-	
Division 15- Mechanical										
	Protect Existing Piping and Valves	1	LS		-	24,000.00	24,000	24,000.00	24,000	
	Raw Sludge Pumping System								-	Cement Lined, Bituminous Coated DIP
	6" Plug Valve	-	EA	3,000.00	-	750.00	-	3,750.00	-	
	8" x 6" Reducers	-	EA	200.00	-	50.00	-	250.00	-	
	6" Tee	-	EA	300.00	-	75.00	-	375.00	-	
	6" 90 Ell	-	EA	150.00	-	37.50	-	187.50	-	
	8" 90 Ell	-	EA	250.00	-	62.50	-	312.50	-	
	6" Check Valve	-	EA	3,400.00	-	850.00	-	4,250.00	-	
	6" x 8" Reducing Elbow	-	EA	240.00	-	60.00	-	300.00	-	
	8" x 8" x 6" Tee	-	EA	400.00	-	100.00	-	500.00	-	
	8" Plug Valve	-	EA	5,000.00	-	1,250.00	-	6,250.00	-	
	8" DI Pipe	-	LF	108.00	-	27.00	-	135.00	-	
	6" DI Pipe	-	LF	77.00	-	19.25	-	96.25	-	
	Centrifuge Feed Pumping System								-	Cement Lined, Bituminous Coated DIP
	6" 90 Ell	-	EA	150.00	-	37.50	-	187.50	-	
	6" Tee	-	EA	300.00	-	75.00	-	375.00	-	
	6" x 8" Reducers	-	EA	200.00	-	50.00	-	250.00	-	
	8"x 8" x 6" Tee	-	EA	400.00	-	100.00	-	500.00	-	
	8" 90 Ell	-	EA	250.00	-	62.50	-	312.50	-	
	6" Plug Valve	-	EA	3,000.00	-	750.00	-	3,750.00	-	
	8" Plug Valve	-	EA	5,000.00	-	1,250.00	-	6,250.00	-	
	6" Check Valve	-	EA	3,400.00	-	850.00	-	4,250.00	-	
	8" DI Pipe	-	LF	108.00	-	27.00	-	135.00	-	
	6" DI Pipe	-	LF	77.00	-	19.25	-	96.25	-	
	Centrate Drainage System								-	Cement Lined, Bituminous Coated DIP
	8" 90 Ell	-	EA	250.00	-	62.50	-	312.50	-	
	8 x 6" 90 Ell	-	EA	240.00	-	60.00	-	300.00	-	
	8" Tee	-	EA	400.00	-	100.00	-	500.00	-	
	8" x 8" x 6" Tee	-	EA	400.00	-	100.00	-	500.00	-	
	8" x 6" Reducers	-	EA	200.00	-	50.00	-	250.00	-	
	8" DI Pipe	-	LF	108.00	-	27.00	-	135.00	-	
	6" DI Pipe	-	LF	77.00	-	19.25	-	96.25	-	
	Polymer Feed System									Schedule 80 PVC
	2" PVC Ball Valve	-	EA	200.00	-	50.00	-	250.00	-	
	1" PVC Ball Valve	-	EA	90.00	-	22.50	-	112.50	-	
	1" PVC Ball Check Valve	-	EA	120.00	-	30.00	-	150.00	-	
	2" Tee	-	EA	22.00	-	5.50	-	27.50	-	
	2" 90 Ell	-	EA	18.00	-	4.50	-	22.50	-	
	2"x 2" x 1" Tee	-	EA	18.00	-	4.50	-	22.50	-	
	1" Tee	-	EA	11.00	-	2.75	-	13.75	-	
	1" 90 Ell	-	EA	7.00	-	1.75	-	8.75	-	
	2" PVC Pipe	-	LF	11.00	-	2.75	-	13.75	-	
	1" PVC Pipe	-	LF	5.00	-	1.25	-	6.25	-	
	Odor Control System Ductwork									FRP
	Supply Fan 7.5 HP	-	EA	5,000.00	-	1,250.00	-	6,250.00	-	
	12" x 18" Fiberglass Reinforced Plastic Duct	-	LF	150.00	-	37.50	-	187.50	-	
	30" Fiberglass Reinforced Plastic Duct	-	LF	240.00	-	60.00	-	300.00	-	

CCH
Sand Island Biosolids Options
Option 7

Specification Division	Item Description	Quantity	Unit	Material Unit Cost	Total Material Cost	Installation Unit Cost	Total Installation Cost	Total Unit Cost	Total	Notes
	16" Fiberglass reinforced plastic duct	-	LF	128.00	-	32.00	-	160.00	-	
	Duct Support Trapeze Hanger	-	EA	80.00	-	20.00	-	100.00	-	
	Electric Room HVAC								-	FRP
	Package Roof Top AC Unit 3 Ton Capacity	1	EA	5,000.00	5,000	1,250.00	1,250	6,250.00	6,250	
	12" x 18" Fiberglass Reinforced Plastic Duct	32	LF	150.00	4,800	37.50	1,200	187.50	6,000	
	30" Fiberglass Reinforced Plastic Duct	12	LF	240.00	2,880	60.00	720	300.00	3,600	
	16" Fiberglass reinforced plastic duct	32	LF	128.00	4,096	32.00	1,024	160.00	5,120	
	Duct Support Trapeze Hanger	12	EA	80.00	960	20.00	240	100.00	1,200	
	Standard Details								-	
	Flexible Coupling	10	EA	800	8,000	200.00	2,000	1,000.00	10,000	
	Hose Bib	2	EA	160	320	40.00	80	200.00	400	
	Hose Rack	2	EA	50	100	12.50	25	62.50	125	
	Floor Drain	2	EA	240	480	60.00	120	300.00	600	
	Flushing Connection	3	EA	320	960	80.00	240	400.00	1,200	
	Pressure Gauge Assembly	12	EA	1,200	14,400	300.00	3,600	1,500.00	18,000	
	Seal Water Assembly	5	EA	3,200	16,000	800.00	4,000	4,000.00	20,000	
Subtotal-Division 15									**96,495**	
Division 16- Electrical										
	MCC	1	LS	110,000	110,000	27,500	27,500	137,500	137,500	NEMA 12 Industrial
	Power Wiring Rotary Lobe Pumps (20 Hp)	0	EA	3,200	-	800	-	4,000	-	
	Power Wiring Grinders	0	EA	3,200	-	800	-	4,000	-	
	Power Wiring Strainpress (4 Hp)	0	EA	19,000	-	4,750	-	23,750	-	
	Power Wiring Centrifuge (100 Hp)	0	EA	41,000	-	10,250	-	51,250	-	
	Power Wiring Odor Control System	0	EA	28,000	-	7,000	-	35,000	-	
	Power Wiring Polymer Feed System	0	EA	11,000	-	2,750	-	13,750	-	
	Power Wiring Polymer Feed Pumps & VFD	0	EA	1,200	-	300	-	1,500	-	
	Power Wiring Dryer	1	EA	284,000	284,000	71,000	71,000	355,000	355,000	
	Power Wiring Cake Conveyors (25 Hp)	0	EA	12,000	-	3,000	-	15,000	-	
	Power Wiring Strainpress Conveyors (10 HP)	0	EA	4,200	-	1,050	-	5,250	-	
	Control Wiring Rotary Lobe Pumps (20 Hp)	0	EA	3,200	-	800	-	4,000	-	
	Control Wiring Grinders	0	EA	3,200	-	800	-	4,000	-	
	Control Wiring Strainpress (4 Hp)	0	EA	19,000	-	4,750	-	23,750	-	
	Control Wiring Centrifuge (100 Hp)	0	EA	41,000	-	10,250	-	51,250	-	
	Control Wiring Odor Control System	0	EA	28,000	-	7,000	-	35,000	-	
	Control Wiring Polymer Feed System	0	EA	11,000	-	2,750	-	13,750	-	
	Control Wiring Polymer Feed Pumps & VFD	0	EA	1,200	-	300	-	1,500	-	
	Control Wiring Dryer	1	EA	284,000	284,000	71,000	71,000	355,000	355,000	
	Control Wiring Cake Conveyors (25 Hp)	1	EA	12,000	12,000	3,000	3,000	15,000	15,000	
	Control Wiring Strainpress Conveyors (10 HP)	0	EA	4,200	-	1,050	-	5,250	-	
	Disconnect Switches NEMA 4X SS	15	EA	1,600	24,000	400	6,000	2,000	30,000	NEMA 4X
	Temporary Power	1	LS	10000	10000	10000	10000	20000	20,000	
	Demolition	1	LS	16000	16000	16000	16000	32000	32,000	
	Fiber Optics	1	LS	5,000	5,000	1,250	1,250	6,250	6,250	
	Light Fixtures	12	EA	300	3,600	75	900	375.00	4,500	
	Emergency Lighting	2	EA	1,500	3,000	375	750	1,875.00	3,750	
	Receptacles	6	EA	100	600	25	150	125.00	750	
	Transformers	1	EA	3,500	3,500	875	875	4,375.00	4,375	
	Lighting Panels	1	EA	5,000	5,000	1,250	1,250	6,250.00	6,250	
	UPS Panel	1	EA	2,500	2,500	625	625	3,125.00	3,125	
	Commissioning and Training	1	EA	500	500	4,500	4,500	5,000.00	5,000	
Subtotal-Division 16									**978,500**	

CCH
Sand Island Biosolids Options
Option 7

Date:February, 2011
Estimator: RBS
Checker: DS
Cost Index: ENR=9,000

Specification Division	Item Description	Quantity	Unit	Material Unit Cost	Total Material Cost	Installation Unit Cost	Total Installation Cost	Total Unit Cost	Total	Notes
Division 17- Instrumentation										
	RIO Panels	1	EA	110,000	110,000	27,500	27,500	137,500.00	137,500	NEMA 4X SS
	Ventilation Alarm and Control Panels	1	EA	3,000	3,000	750	750	3,750.00	3,750	
	Limit Switches	8	EA	600	4,800	150	1,200	750.00	6,000	
	Pressure Transmitters	6	EA	2,400	14,400	600	3,600	3,000.00	18,000	
	Float Switches	1	EA	1,200	1,200	300	300	1,500.00	1,500	
	Gas Monitoring System	1	EA	6,000	6,000	1,500	1,500	7,500.00	7,500	
	Ultrasonic Level Sensors	1	EA	4,000	4,000	1,000	1,000	5,000.00	5,000	
	Flow Meters	1	EA	9,000	9,000	2,250	2,250	11,250.00	11,250	
	Commissioning and Training	1	EA	500	500	4,500	4,500	5,000.00	5,000	
Subtotal-Division 17									**195,500**	
Subtotal-Divisions 1-17					4,141,589		2,328,100		6,469,688	
Division 0					1,825,661		921,489		2,747,150	
ESTIMATED CONSTRUCTION COST					**5,967,249**		**3,249,589**		**9,216,838**	
Project Services - Study Phase			20%		1,217,319		662,916		1,880,235	
TOTAL CURRENT ESTIMATED COST					**7,184,568**		**3,912,505**		**11,097,073**	
Escalation to Mid-Point of Construction			0.0%		-		-		-	
TOTAL ESTIMATED COST AT MIDPOINT					**7,184,568**		**3,912,505**		**11,097,000**	
NOTES:										
1. ENR INDEX = 9,000 (February, 2011)										

Appendix C– Vendor Quotes and Equipment Information
and
Appendix D– Installation List

(*Included in compact disk below*)

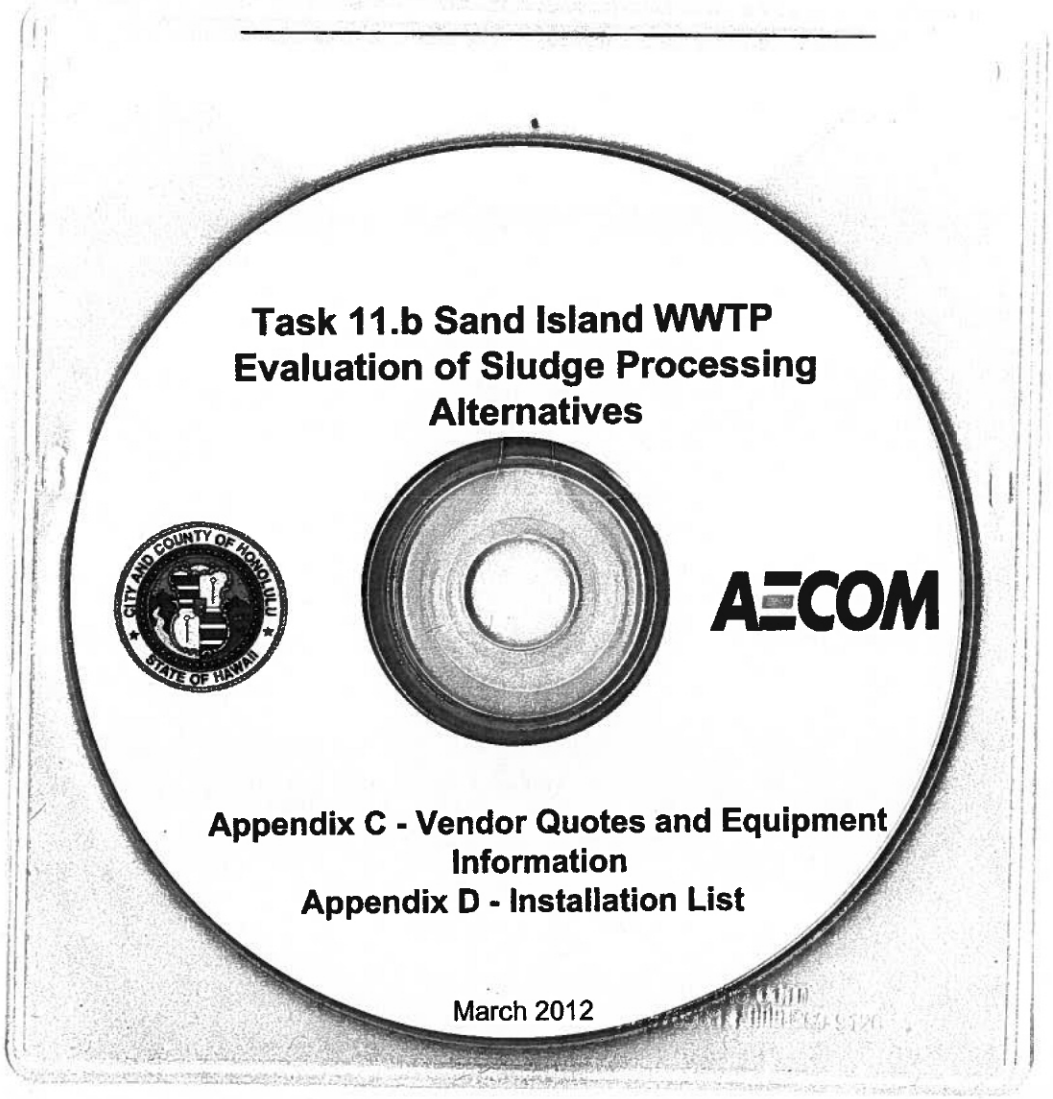

DOCUMENT(S) ON FILE
WITH CLERK'S OFFICE